

5.9 米厢式客车使用说明书

5.9 m Van Bus Operation Instruction

说　　明

Introduction

感谢您选择亚星牌汽车!

Thank you for choosing ASIASTAR!

- 本手册适用于亚星生产的 YBL6590 系列纯电动客车及在此基础上进行改装的专用车。
- This Catalog is applicable to the YBL6590 series battery electric buses produced by ASIASTAR and the specialized vehicles modified based on them.
- 由于产品质量和技术水平的不断提高，本公司不断对车辆的外形、内饰、技术规格加以改进，本手册所载图片、数据和说明可能与实际情形不符，仅供参考，错误与疏忽亦在所难免，因此，敬请原谅，勿作为定货验收及法律诉求的依据。
- The consistent enhancement of product quality and technological advancements have led to notable improvements in the appearance, interiors, and technical specifications of our company's vehicles. Please note that the images, data, and instructions in this manual are provided for reference only and may not accurately depict the actual situation. There is a possibility of errors or omissions due to human negligence. Therefore, we kindly request you not to rely on them as the sole basis for order acceptance or legal claims.

在使用前须认真阅读本使用说明书，阅读后妥善保存。

Before use, please read instruction carefully and keep it properly after reading.

您和他人的安全极其重要，安全驾驶车辆是您的重要责任。

The safety of you and others is extremely important, so it is your responsibility to drive the vehicle safely.

——该标记表示：为避免对自身或他人造成人身伤害，必须严格、准确地遵循相关步骤。

- This sign indicates that the relevant steps must be strictly and accurately followed to avoid personal injury to yourself or others.

注意事项

Precautions

◆ 安全使用

◆ Safe use

- 请按照本手册安全规范操作，以避免电动车高压事故发生。
- Please follow the safety specifications in this manual to avoid high-voltage accidents of electric vehicles.
- 请注意车辆上的安全警告标识，不要接触高电压电缆（橙色）及其接头，以避免人身伤害。
- Please pay attention to the safety warning signs on the vehicle, and do not touch HV cables (orange) and their connectors to avoid personal injury.
- 请勿拆卸或更换高压零部件。如果您车辆出现故障，请联系潍柴(扬州)亚星新能源商用车授权服务店，切不可私自维修，以免发生触电。
- Do not remove or replace any HV components without authorization. If your vehicle fails, please contact the authorized service provider of Weichai (Yangzhou) Yaxing New Energy Commercial Vehicle Co., Ltd. Do not repair it without permission to avoid electric shock.

◆ 危险物品

◆ Dangerous goods

机动车上使用的多数液体和部分物质为有毒物质，任何情况下都不要品尝，且应尽可能使其远离伤口。这些物质存在于蓄电池酸液、防冻液、制动液、动力转向液、洗涤液、润滑油、制冷剂等液体和各种粘合剂中。务必仔细阅读并绝对遵守粘贴或压印在零部件上的说明，此类说明是为了确保您的健康和人身安全，请谨慎对待！

Most of the liquids and some substances used on motor vehicles are toxic. Do not taste them under any circumstances, and keep them as far away from wounds as possible. These substances exist in battery acid, antifreeze, brake fluid, power steering fluid, washer fluid, lubricating oil, refrigerant and other liquids as well as various adhesives. Be sure to carefully read and absolutely follow the instructions affixed or embossed on the parts, which are for your health and personal safety. Please treat them with caution!

◆ 生命安全

◆ Life safety

- 您车上的每个座椅都配备了安全带，以降低发生事故时的人身伤害，所以要求所有乘员必须佩戴安全带。
- Each seat on your vehicle is equipped with a seat belt to reduce personal injury in case of an accident, and all passengers are required to wear the seat belt.
- 不要将无人监管的儿童单独留在车内，以防止其操作安装在车上的控制装置和开关，或接触由车辆运输的设备或物体，导致事故和人员伤亡。如果在炎热天气，可能导致窒息。
- Do not leave unsupervised children alone in the vehicle to prevent them from operating the control devices and switches installed on the vehicle or contacting equipment or objects transported by the vehicle, and thus resulting in accidents and casualties. Suffocation may happen in hot weather.
- 不要将无人监管的动物单独留在车内，以防止其操作安装在车上的控制装置和开关，或接触由车辆运输的设备或物体，导致事故和伤亡。如果在炎热天气，还可能导致窒息。
- Do not leave unsupervised animals alone in the vehicle to prevent them from operating the control devices and switches installed on the vehicle or contacting equipment or objects transported by the vehicle, and thus resulting in accidents and casualties. Suffocation may happen in hot weather.
- 不要随便移动或拆除安全锤、灭火器等随车工具，以保证在危急情况下的正常使用。
- Do not move or remove emergency hammers, fire extinguishers and other on-board tools at will to ensure normal use in an emergency.

特别说明
Special Statement

- **发生紧急事故注意事项**
- **Precautions in case of emergency**
- 为避免人身伤害，请勿接触任何高压接线及其接头，以及其他高压零部件。
- To avoid personal injury, do not touch any high-voltage connecting wire and its connectors or other HV components.
- 切勿触摸裸露的电线。
- Do not touch exposed wires.
- 如果车辆底部的电池包损坏，有液体泄露或流入车辆的某些零部件，切勿触摸这些液体；如果不慎进入皮肤或眼睛，请立即用大量清水冲洗，并立即就医。
- If the power battery pack at the bottom of the vehicle is damaged, with liquid leaking or flowing into some parts of the vehicle, do not touch these liquids; if they accidentally enter your skin or eyes, please wash them immediately with plenty of water and seek medical attention immediately.
- 如果车辆失火，请使用电火专用灭火器进行灭火。
- If the vehicle catches fire, use special fire extinguishers for electric appliance to put out fire.

- **不要随意改装您的车辆**
- **Do not modify your vehicle at will**
- 改装的组件不在制造商的保修范围之内。
- Modified components are not covered by the manufacturer's warranty.
- 改装可能影响车辆的安全性、耐久性及其他性能，所以在任何情况下，不要试图改装您的车辆。
- Modification may affect the safety, durability and other performance of the vehicle. Therefore, do not try to modify your vehicle under any circumstances.
- 整车前后保险杠、挡风玻璃、轮罩、顶饰条、通风盖板等不得自行改装、调整、拆卸。违反以上可能影响车辆的性能及安全系统，进而引起事故的发生，导致车辆着火及车辆损坏。对此后果制造商不承担责任。
- The front and rear bumpers, windshields, wheel guards, roof trim strips and ventilation cover plates of the vehicle shall not be modified, adjusted or removed without authorization. Violation of the above may affect the performance and safety system of the vehicle, which will cause accidents, resulting in fire and damage to the vehicle. The manufacturer shall not be liable for this consequence.

目　　录
Contents

一、　操作 I. Operation 1
1、　驾驶舱 1. Cockpit 1
1.1　驾驶舱概览 1.1 Cockpit overview 1
1.2　组合仪表 1.2 Instrument cluster 2
1.2.1　车速表 1.2.1 Speedometer 3
1.2.2　电量指示表 1.2.2 Battery level indicator .. 3
1.3　信息中心 1.3 Information center 3
1.4　警告灯和指示灯 1.4 Warning lights and indicators 5
1.4.1　转向指示灯 1.4.1 Turn signal indicator 6
1.4.2　前照灯近光指示灯 1.4.2 Headlight low beam indicator 6
1.4.3　雾灯指示灯 1.4.3 Fog light indicator 6
1.4.4　前照灯远光指示灯 1.4.4 Headlight high beam indicator 6
1.4.5　动力电池剩余容量低 1.4.5 Traction battery low SOC 6
1.4.6　动力电池故障灯 1.4.6 Traction battery fault indicator 7
1.4.7　电气系统故障灯 1.4.7 Electrical system fault indicator 7
1.4.8　电机故障灯 1.4.8 Motor fault indicator 8
1.4.9　充电连接指示灯 1.4.9 Charging connection indicator 8
1.4.10　安全气囊警告灯 1.4.10 Airbag warning light 8
1.4.11　制动系统警告灯 1.4.11 Brake system warning light 9
1.4.12　安全带警告灯 1.4.12 Seat belt warning light 9
1.4.13　ABS（防抱死制动系统）警告灯 1.4.13 ABS (anti-lock braking system) warning light 10
1.4.14　ESC（车身电子稳定系统）故障 1.4.14 ESC (electronic stability control system) fault 10
2、　开关与启闭 2. Open/close and lock/unlock 10
2.1　钥匙 2.1 Key 10
2.1.1　汽车钥匙电池更换使用说明 2.1.1 Instructions for car key battery replacement 11
2.2　车门锁 2.2 Door lock 12
2.2.1　防止车辆被盗 2.2.1 Vehicle anti-theft 12
2.2.2　中控上锁/解锁 2.2.2 Central control locking/unlocking 12
2.2.3　分别上锁/解锁 2.2.3 Separate locking/unlocking 13
2.2.4　中控门锁系统 2.2.4 Central control door lock system 13
2.2.5　使用机械钥匙、钥匙头 2.2.5 Use mechanical key and key head 13
2.2.6　使用中控锁开关 2.2.6 Use the central control door lock switch 14
2.2.7　根据车速上锁 2.2.7 Lock as per vehicle speed 14
2.3　车辆防盗系统 2.3 Vehicle anti-theft system 14
2.3.1　钥匙 2.3.1 Key 14
2.3.2　启动防盗系统 2.3.2 Activate the anti-theft system 14
2.3.3　解除防盗系统 2.3.3 Deactivate the anti-theft system 14
2.4　车门 2.4 Doors 15
2.4.1　侧移门（适用于滑门车型） 2.4.1 Side sliding door (for vehicles with sliding doors) 15
2.4.3　尾门 2.4.3 Tailgate 15
2.5　电动机舱盖 2.5 Motor compartment cover 17
2.6　充电口盖 2.6 Charging port cap 18
2.7　车窗　2.7 Window 18
3、　照明与视野 3. Lighting and field of view 20
3.1　危险报警灯 3.1 Hazard warning light .. 20
3.2　中控开关 3.2 Central control switch 20
3.3　后视镜和后窗加热开关 3.3 Heater switch for rearview mirror and rear window 21
3.4　除霜加热开关 3.4 Heater switch for defrosting 21
3.5　车内照明 3.5 Interior lighting 21
3.5.1　前顶栅阅读灯 3.5.1 Front ceiling reading light 21
3.5.2　后顶棚阅读灯 3.5.2 Rear roof reading light

..... 22
3.5.3 踏步灯 3.5.3 Step light 22
3.6 照明和转向指示灯 3.6 Lighting and turn signal indicator 23
3.6.1 转向灯和转向指示灯拨杆开关 3.6.1 Turn signal light and turn signal indicator toggle switch 23
3.6.2 主照明拨杆开关 3.6.2 Main lighting toggle switch 23
3.6.3 前照灯远光与近光拨杆开关 3.6.3 Headlight high beam and low beam toggle switch 23
3.6.4 前雾灯拨杆开关 3.6.4 Front fog light toggle switch 24
3.6.5 后雾灯拨杆开关 3.6.5 Rear fog light toggle switch 24
3.6.6 大灯高度调节开关 3.6.6 Headlight height adjustment switch 24
3.7 刮水器和洗涤器拨杆开关 3.7 Wiper and washer toggle switch 24
3.8 遮阳板 3.8 Sun visor 25
3.9 后视镜 3.9 Rearview Mirror 25
3.9.1 外后视镜 3.9.1 Exterior rearview mirror 25
3.11 魔盾 360 全景环视系统 3.11 Magic shield 360 panoramic view system 26
3.10 泊车辅助系统 3.10 Parking assist system 26
3.10.1 倒车摄像 3.10.1 Reversing camera 26
3.10.2 倒车雷达 3.10.2 Reversing radar 27
4、 乘坐与调节 4. Riding and adjustment 28
4.1 座椅 4.1 Seat 28
4.1.1 驾驶员座椅调整 4.1.1 Adjustment of driver's seat 28
4.1.2 头枕 4.1.2 Headrest 28
4.2 巡航控制系统（选配） 4.2 Cruise control system (optional) 29
4.3 喇叭 4.3 Horn 29
4.4 车顶储物 4.4 Roof storage 29
4.5 杂物盒 4.5 Sundries box 30
4.6 手套箱 4.6 Glove box 30
4.7 点烟器 4.7 Cigarette lighter 30
4.8 烟灰缸 4.8 Ashtray 31
5、 空调与多媒体 5. A/C and multimedia 31
5.1 空调系统 5.1 A/C system 31
5.1.1 基本说明 5.1.1 General information 31
5.1.2 控制面板功能简介 5.1.2 Introduction to control panel functions 32
5.1.3 空调面板开关 5.1.3 A/C panel switch 32
5.1.4 吹风模式按键 5.1.4 Blowing mode button 32
5.1.5 风量控制旋钮 5.1.5 Air volume control knob 33
5.1.6 温度控制按键 5.1.6 Temperature control button 33
5.1.7 内/外循环按键 5.1.7 Internal/external circulation button 33
5.1.8 除霜（除雾）模式 5.1.8 Defrosting (defogging) mode 34
5.1.9 系统制冷操作（手动） 5.1.9 System refrigeration operation (manual) 34
5.1.10 系统制热操作（手动） 5.1.10 System heating operation (manual) 34
5.1.11 AUTO 模式 5.1.11 AUTO mode 35
5.1.12 强制制冷/制热功能 5.1.12 Forced cooling/heating function 35
5.1.13 空调操作建议 5.1.13 Suggestions on A/C operation 35
5.2 多媒体 5.2 Multimedia 35
5.2.1 电视 5.2.1 TV 35
5.2.2 MP5 35
5.2.2.1 基本功能 5.2.2.1 Basic functions 35
5.2.2.2 主屏幕布局 5.2.2.2 Home screen layout 36
5.2.2.3 下拉栏 5.2.2.3 Drop-down bar 36
5.2.2.4 本地音乐 5.2.2.4 Local music 36
5.2.2.5 收音机 5.2.2.5 Radio 37
6、 驾驶车辆 6. Driving the vehicle 38
6.1 点火开关 6.1 Ignition switch 38
6.2 启动/停止电动机 6.2 Start/stop motor 38
6.3 换挡旋钮 6.3 Gearshift knob 39
6.4 电动液压助力转向系统 6.4 Electric hydraulic power steering system 40
6.5 制动系统 6.5 Brake system 40
6.5.1 防抱死制动系统（ABS） 6.5.1 Anti-lock braking system (ABS) 40
6.5.2 汽车电子稳定性系统（ESC） 6.5.2 Electronic stability control (ESC) system 41
6.5.3 电子制动力分配（EBD） 6.5.3 Electronic brakeforce distribution (EBD) 42
6.5.4 液压辅助制动系统（HBA） 6.5.4

Hydraulic brake assist (HBA) 42
6.5.5 坡道起步辅助功能（HHC） 6.5.5 Hill hold control (HHC) 42
6.5.6 行车制动 6.5.6 Service brake 42
6.5.8 紧急制动 6.5.8 Emergency brake 43
6.5.9 EPB（电子驻车制动） 6.5.9 Electric parking brake (EPB) 43
6.5.10 AUTO HOLD（自动驻车） 6.5.10 AUTO HOLD 45
6.5.11 机械驻车制动 6.5.11 Mechanical parking brake 46
6.6 车辆轮胎 6.6 Vehicle tires 47
6.7 装载 6.7 Load 49
6.8 整车总电源开关 6.8 Vehicle main power switch 49
二、 安全性 II. Safety 50
1、 安全带 1. Seat belt 50
1.1 安全带使用 1.1 Use of seat belt 50
1.2 安全带高度调整 1.2 Seat belt height adjustment 51
1.3 安全带检查 1.3 Seat belt inspection 51
2、 安全气囊 2. Airbag 52
3、 乘员保护 3. Occupant protection 53
3.1 正确就座 3.1 Proper seating 53
3.2 盲点探测开关 3.2 Blind spot detection switch 53
4、 灭火器 4. Fire extinguisher 54
4.1 灭火器位置 4.1 Position of fire extinguisher 54
4.2 灭火器使用方法 4.2 Operation instructions for fire extinguisher 54
4.3 灭火器检查方法 4.3 Inspection method of fire extinguisher 54
三、 驾驶说明 III. Driving Instructions 55
1、 新车磨合 1. Running-in of new vehicle 55
2、 行车 2. Driving 55
2.1 充电 2.1 Charging 55
2.2 动力电池的使用说明 2.2 Operating instructions for power battery 59
3、 各种驾驶情况 3. Various driving situations 60
3.1 夜间行车 3.1 Driving at night 60
3.2 市区行车 3.2 Driving in urban area 60
3.3 长途行车 3.3 Long-distance driving 61
3.4 坡道和山区路面行车 3.4 Driving on ramps and mountainous roads 61
4、 冬季驾驶 4. Driving in winter 62
四、 保养车辆 IV. Vehicle Maintenance 63
1、 车辆保养要求 1. Vehicle maintenance requirements 63
1.1 安全须知 1.1 Safety instructions 63
1.2 常规检查 1.2 Routine inspection 63
1.2.1 出车前检查的项目 1.2.1 Inspection items before driving 63
1.2.2 开车后立即检查的项目 1.2.2 Items to be checked immediately after driving 64
1.2.3 每周检查或长途行驶之前的检查 1.2.3 Weekly inspection or inspection before long-distance driving 64
1.3 定期维护 1.3 Regular maintenance 64
2、 车辆外部保养 2. Vehicle exterior maintenance 65
2.1 清洗车辆 2.1 Vehicle washing 65
2.2 车底防腐蚀 2.2 Underbody anti-corrosion 65
2.3 车门密封件 2.3 Door seals 66
2.4 车窗玻璃 2.4 Window glass 66
2.5 车轮 2.5 Wheels 66
2.6 底盘 2.6 Chassis 66
3、 车辆内部保养 3. Vehicle interior maintenance 66
3.1 座椅及内饰 3.1 Seat and interior trim 66
3.2 安全带 3.2 Seat belt 67
4、 检查电动机舱 4. Motor compartment inspection 67
4.1 电动机舱概览图 4.1 Motor compartment overview 67
4.2 电动机舱清洁 4.2 Motor compartment cleaning 67
4.3 冷却液 4.3 Coolant 68
4.3.1 检查冷却液 4.3.1 Check the coolant 68
4.3.2 添加冷却液 4.3.2 Add coolant 68
4.3.3 更换冷却液 4.3.3 Replace coolant 69
4.4 制动液 4.4 Brake fluid 69
4.4.1 检查制动液 4.4.1 Check brake fluid 69
4.4.2 更换制动液 4.4.2 Replace brake fluid 70
4.5 动力转向液 4.5 Power steering fluid 70

4.5.1 检查动力转向液 4.5.1 Check power steering fluid 70
4.5.2 加注动力转向液 4.5.2 Fill power steering fluid 71
4.6 洗涤液 4.6 Washer fluid 71
4.6.1 检查和加注洗涤液 4.6.1 Check and fill washer fluid 71
4.6.2 洗涤器喷嘴 4.6.2 Washer nozzle 71
4.7 蓄电池 4.7 Battery 72
4.7.1 蓄电池存放和保养 4.7.1 Storage and maintenance of battery 72
4.7.2 环保说明 4.7.2 Environmental protection instructions 72
5、 检查雨刮器片 5. Check wiper blade 72
5.1 雨刮器片 5.1 Wiper blade 72
5.1.1 检查 5.1.1 Inspection 72
5.1.2 更换 5.1.2 Replace 73
5.1.3 维护保养 5.1.3 Maintenance 74
6、 检查和更换轮胎 6. Check and replace tires 74
6.1 轮胎压力 6.1 Tire pressure 74
6.2 胎面 6.2 Tread 75
6.3 轮胎气门嘴 6.3 Tire valve stem 75
6.4 检查轮胎 6.4 Check tires 75
6.5 更换轮胎 6.5 Replace tires 76
6.5.1 轮胎使用年限 6.5.1 Service life of tires 76
6.5.2 更换车轮及轮胎 6.5.2 Replace wheels and tires 76
6.6 轮胎存放 6.6 Tire storage 76
五、 紧急情况 V. Emergency 77
1、 路边停车警告 1. Roadside parking warning 77
1.1 危险警告灯 1.1 Hazard warning light 77
1.2 三角警告牌 1.2 Warning triangle 77
2、 驾驶中出现紧急情况 2. Emergency during driving 77
3、 车辆行驶异常 3. Abnormal vehicle running 78
4、 跨接启动 4. Jump start 78
4.1 断开蓄电池连接 4.1 Disconnect the battery 78
4.2 跨接启动 4.2 Jump start 78
4.2.1 跨接 4.2.1 Jump 78
4.2.2 启动 4.2.2 Start 79
4.2.3 断开 4.2.3 Disconnect 79
5、 车辆无法启动 5. Vehicle start failure 79
6、 更换轮胎 6. Replace tires 80
6.1 备胎 6.1 Spare tire 80
6.2 千斤顶和随车工具 6.2 Jack and on-board tools 81
6.3 放置千斤顶 6.3 Place the jack 82
6.4 换上备胎 6.4 Install the spare tire 82
7、 牵引车辆 7. Vehicle towing 83
7.1 牵引环 7.1 Towing ring 84
7.1.1 前牵引环 7.1.1 Front towing ring 84
7.1.2 后牵引环 7.1.2 Rear towing ring 84
7.2 牵引 7.2 Towing 84
8、 更换保险丝 8. Replace the fuse 85
9、 更换灯泡 9. Replace the bulb 85
9.1 拆卸与安装灯泡 9.1 Removal and installation of bulb 85
9.1.1 前照灯 9.1.1 Headlight 86
9.1.2 前转向灯 9.1.2 Front turn signal light 86
9.1.3 后组合灯 9.1.3 Rear combination light 86
9.1.4 前顶棚阅读灯 9.1.4 Front roof reading light 86
9.1.5 踏步灯 9.1.5 Step light 86
六、 技术数据 VI. Technical Data 87
1、 技术参数 1. Technical parameters 87
2、 车辆识别 2. Vehicle identification 89

一、 操作

I. Operation

1、 驾驶舱

1. Cockpit

1.1 驾驶舱概览

1.1 Cockpit overview

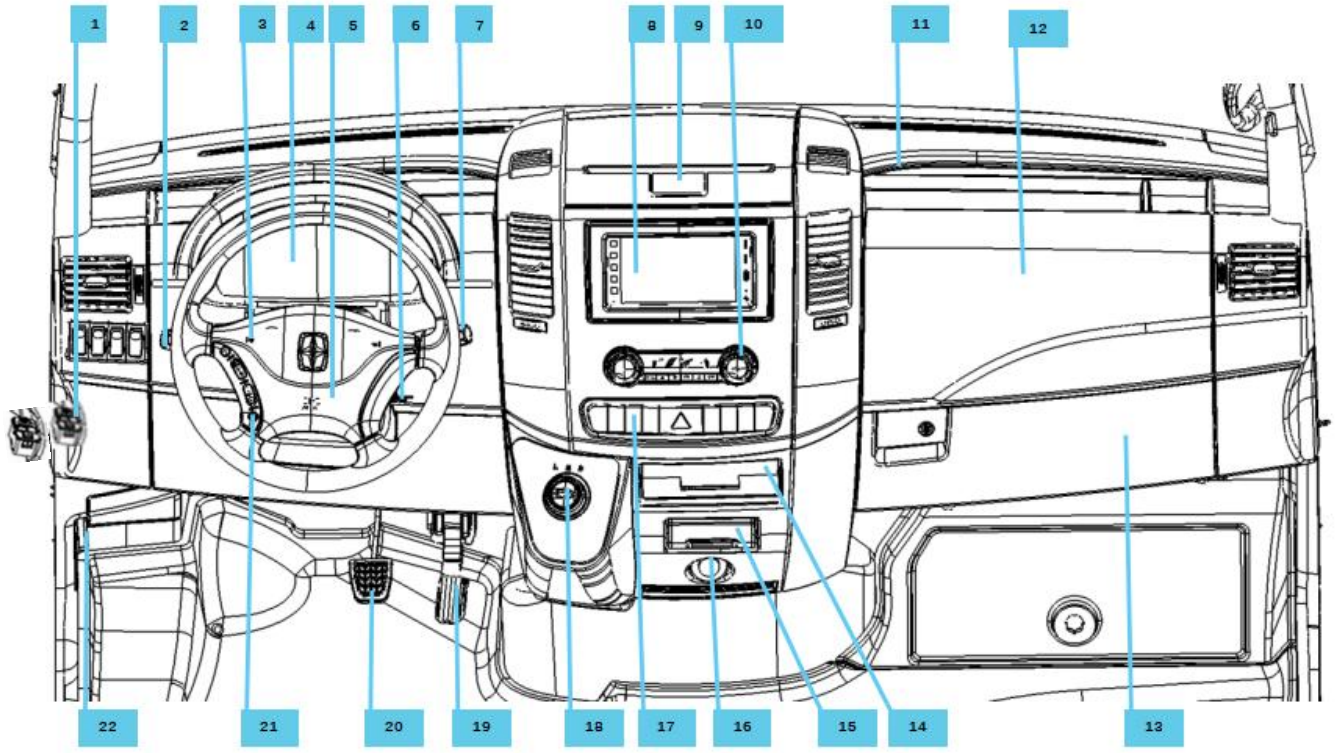

1 外后视镜电动调整开关 **2** 车灯/转向灯开关 **3** 喇叭按钮 **4** 组合仪表 **5** 驾驶员安全囊 **6** 点火开关 **7** 刮水器/洗涤器开关 **8** 娱乐系统 **9** 中央储物盒 **10** 空调控制器

1 Electric adjustment switch for exterior rearview mirrors **2** Light/turn signal switch **3** Horn button **4** Instrument cluster 5 Driver airbag 6 Ignition switch **7** Wiper/washer switch **8** Entertainment system **9** Central storage box **10** A/C controller

11 杯架 **12** 前排乘员安全气囊(选) **13** 手套箱 **14** 中央下侧储物盒 **15** 烟灰缸 **16** 点烟器

11 Cup holder **12** Front passenger airbag (optional) **13** Glove box **14** Central lower storage box **15** Ashtray **16** Cigarette lighter

17 中控开关 **18** 换挡旋钮 **19** 油门踏板 **20** 制动踏板 **21** 多媒体控制键 **22** 机舱盖释放手柄

17 Central control switch **18** Gearshift knob **19** Accelerator pedal **20** Brake pedal **21** Multimedia control key **22** Engine hood release handle

1.2 组合仪表

1.2 Instrument cluster

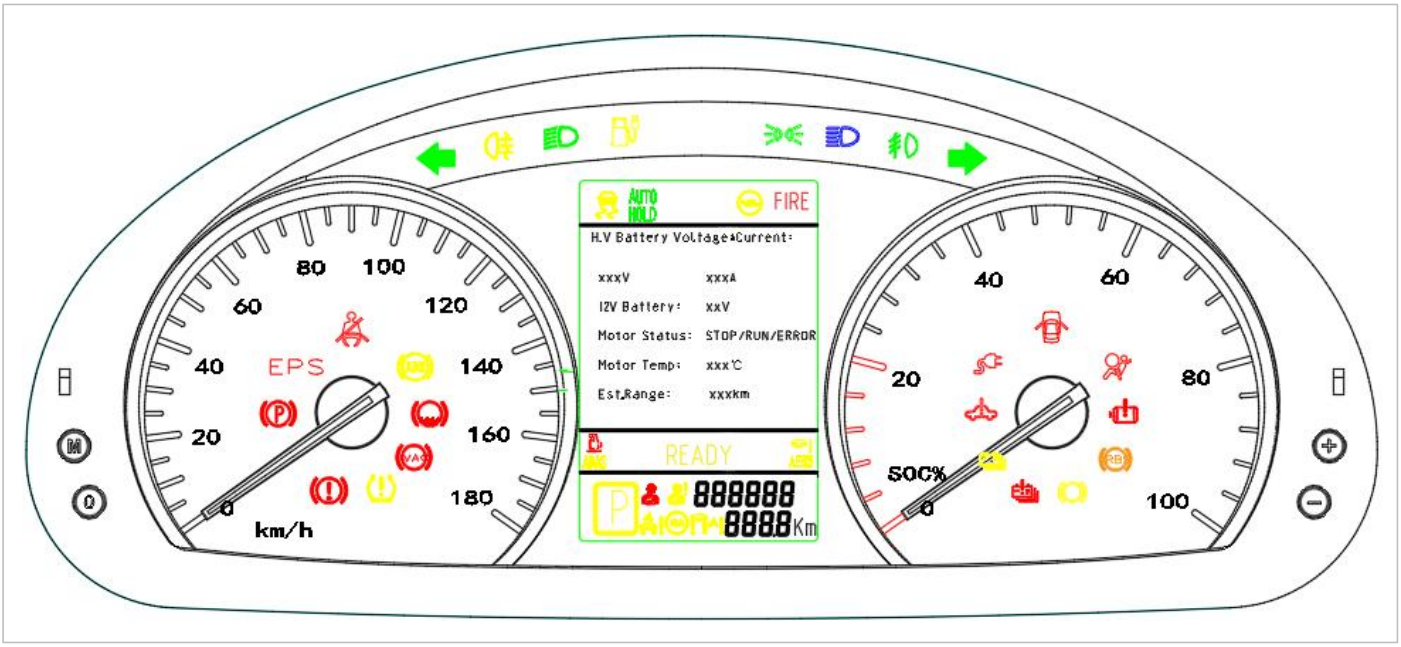

注意：*切勿将物体放在组合仪表前方，以免挡住刻盘和警告灯*

Caution: *Do not place objects in front of the instrument cluster to avoid blocking the dial and warning lights*

1.2.1 车速表
1.2.1 Speedometer

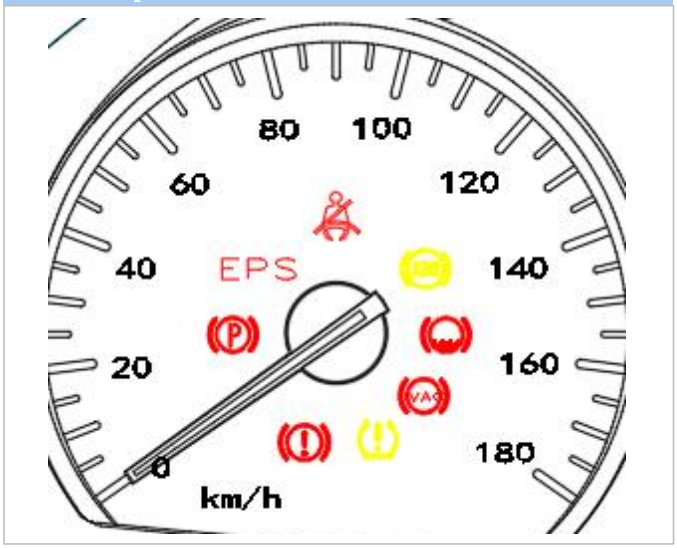

车速表显示车辆行驶的时速（单位：km/h）。

The speedometer displays the vehicle speed in km/h.

1.2.2 电量指示表
1.2.2 Battery level indicator

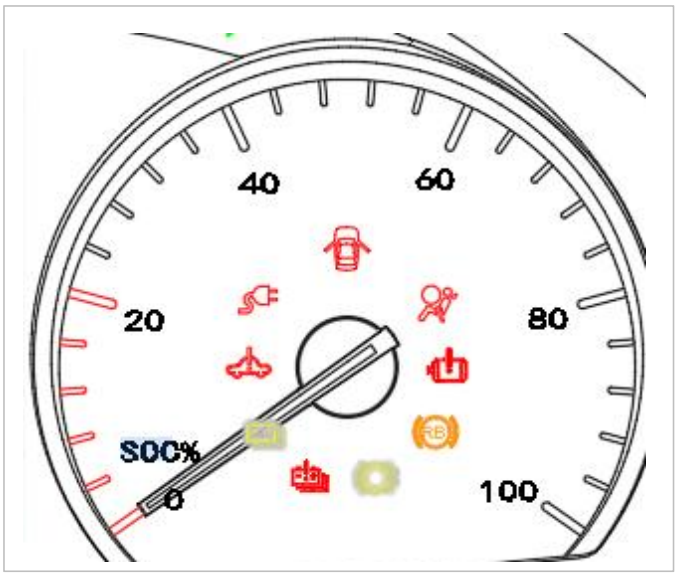

转速表指动力电池当前的剩余电量。

The tachometer displays the current SOC of the traction battery.

注意：*指针在仪表的红色区域时，请尽快充电。*

Caution: *When the pointer is in the red area of the instrument, please charge as soon as possible.*

1.3 信息中心
1.3 Information center

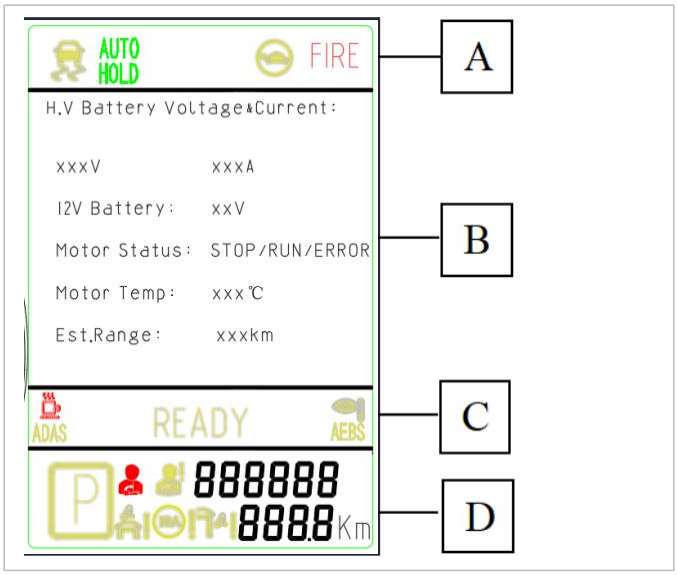

A 区：显示车辆 ESC 状态、电池着火报警、超速报警等信息。

Area A: Display the vehicle ESC state, battery fire alarm, overspeed alarm and other information.

B 区：显示整车信息。

Area B: Display the vehicle information.

- 电池电压和电流:显示电池当前电压和输出电流。
- Battery voltage and current: Display the current battery voltage and output current.
- 蓄电池电压:显示蓄电池当前的电压。
- Battery voltage: Display the current battery voltage.
- 驱动电机状态：停机/运行/故障。
- Motor Status: Stop/Run/Error.
- 驱动电机转速：显示驱动电机当前转速。
- Motor Speed: Display the current drive motor speed.
- 驱动电机温度：显示驱动电机当前温度。
- Motor Temp: Display the current drive motor temperature.
- 续航里程：显示当前电量车辆的续航里程。
- Est. Range: Display the endurance range of a vehicle with current power.

短按 M 键，B 区实现:充放电信息/故障信息之间的显示切换，故障信息界面短按+，-键，实现辅件信息/电池信息/电池故障 1/电池故障 2/驱动电机故障 1/

驱动电机故障 2 之间的显示切换。

Short press the M button, and area B will realize: display switching between charging and discharging information/fault information. Short press the + and - buttons on the fault information interface to realize display switching between accessory information/battery information/battery fault1/battery fault2/drive motor fault1/drive motor fault2.

短按 O 键，为退出返回首页。

Short press the O button to exit and return to the homepage.

C 区：显示车辆启动准备的状态和车辆故障提示。

Area C: Display the state of vehicle startup preparation and vehicle fault prompt.

当 READY 为黄色时，表示车辆正在准备中，此时车辆无法启动。

When READY is yellow, it indicates that the vehicle is in preparation and cannot be started at this time.

当 READY 为绿色时，表示车辆准备完毕，此时车辆可以启动。

When READY is green, it indicates that the vehicle is ready and can be started.

当车辆有故障时交替显示“System Error”，请短按 M 键查询。

When the vehicle is faulty, "System Error" will be displayed alternately. Please short press the M button for inquiry.

D 区：档位信息及故障显示和行驶里程显示。

Area D: Display the gear information, fault and range.

D 区显示 P、R、D、N 四个档位，其中 R 档为黄色，P、D、N 档位绿色，若挡位故障，挡位状态显示“-”。

Four gears of P, R, D and N are displayed in Area D, yellow for R gear and green for P, D and N gears. If there is a fault in the gear, the gear state will be displayed as "-".

行驶里程显示总里程和小计里程。长按 O 键，小计里程清零。

The driving range includes accumulated range and trip range. Long press the O to reset the trip range.

1.4 警告灯和指示灯
1.4 Warning lights and indicators

序号 S/N	名称 Name	符号 Symbol	序号 S/N	名称 Name	符号 Symbol
1	右转向 Right turn		2	左转向 Left turn	
3	危险警报 Hazard warning		4	前雾灯 Front fog light	
5	远光灯 High beam		6	近光灯 Low beam	
7	后雾灯 Rear fog light		8	位置灯 Position light	
9	车门报警 Door warning		10	动力电池剩余容量低 Traction battery low SOC	
11	动力电池故障 Traction battery fault		12	电气系统故障 Electrical system fault	
13	电机故障 Motor fault		14	充电连接指示灯 Charging connection indicator	
15	动力电池充电指示 Traction battery charging indicator		16	ABS 防抱死 Anti-lock braking system	
17	安全气囊故障 Airbag fault		18	驻车制动 Parking brake	
19	蹄片报警 Brake shoe alarm		20	主驾驶安全带 Driver's seat belt	
21	电动助力转向故障 Electric power steering fault	EPS	22	真空泵故障灯 Vacuum pump fault indicator	
23	制动液位低故障灯 Low brake fluid level fault indicator		24	再生禁止指示灯 Regeneration prohibition indicator	
25	EPB 系统故障 EPB fault	EPB	26	ADAS 系统关闭 ADAS OFF	ADAS
27	ADAS 系统故障 ADAS fault	ADAS	28	ADAS 系统开启 ADAS ON	ADAS
29	AEBS 系统关闭 AEBS OFF	AEBS	30	AEBS 系统开启（激活闪烁） AEBS ON (activated and flashing)	AEBS
31	AEBS 系统故障 AEBS fault	AEBS	32	超速报警 Overspeed alarm	
33	ESC 故障 ESC fault		34	ESC 激活 ESC activated	
35	ESC 关闭 ESC OFF		36	胎压系统报警 Tire pressure system alarm	
37	制动系统故障 Brake system failure		38	电池起火报警 Battery fire alarm	FIRE
39	驱动功率限制指示灯 Drive power limit indicator		40	巡航功能指示灯 Cruise function indicator	
41	MOIS 故障 MOIS fault		42	ISA 故障 ISA fault	
43	BSIS 故障 BSIS fault		44	DDAW 故障 DDAW fault	
45	DDAW 提醒（一级） DDAW Alert (Level I)		46	DDAW 提醒（二级） DDAW Alert (Level II)	
47	DDAW 提醒（三级） DDAW Alert (Level III)		48	AVH 故障 AVH fault	AUTO HOLD
49	AVH 激活 AVH activated	AUTO HOLD	50	ADDW 预警 ADDW warning	
51	ADDW 故障 ADDW fault		52	蓄电池欠压报警灯 Battery undervoltage warning light	

1.4.1 转向指示灯
1.4.1 Turn signal indicator

进行转向指示操作时，指示灯将发出柔和的“绿光”。

The indicator will get green when the steering indication operation is performed.



1.4.2 前照灯近光指示灯
1.4.2 Headlight low beam indicator

前照灯为近光时，信息中心显示屏上的“前照灯近光指示灯（绿色）”点亮。

When the headlight is low beam, the "headlight passing beam indicator (green)" on the information center display screen will light up.



1.4.3 雾灯指示灯
1.4.3 Fog light indicator

前雾灯亮起时，信息中心显示屏上的“前雾灯指示灯（绿色）”点亮。

When the front fog light is on, the "front fog light indicator (green)" on the information center display screen will light up.

后雾灯亮起时，信息中心显示屏上的“后雾灯指示灯（黄色）”点亮。

When the rear fog light is on, the "rear fog light indicator (yellow)" on the information center display screen will light on.



1.4.4 前照灯远光指示灯
1.4.4 Headlight high beam indicator

前照灯为远光时或使前照灯闪烁时，信息中心显示屏上的“前照灯远光指示灯（蓝色）”点亮。

When the headlight is in driving beam state or flashes, the "headlight high beam indicator (blue)" on the information center display screen will light up.



1.4.5 动力电池剩余容量低
1.4.5 Traction battery low SOC

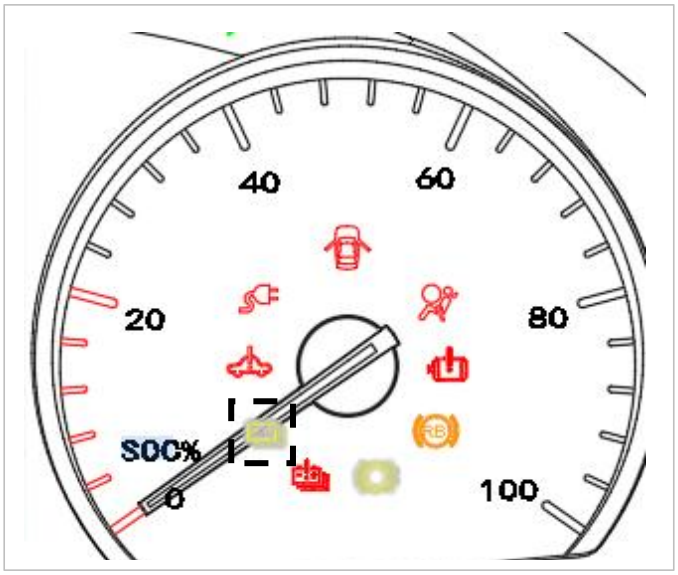

点火开关打到“ON（开启）”位置时，组合仪表的右侧“动力电池剩余容量低警告灯（黄色）”点亮，系统进行自检，并约 3 秒后熄灭。

When the ignition switch is turned to "ON", the "traction battery low SOC warning light (yellow)" on the right side of the instrument cluster will light up. The system performs a self-test and the indicator goes out about 3s later.

注意：

Caution:

如果警告灯行驶时亮起，则表明当前电量小于 20%，应尽快寻找充电桩充电。

If the warning light illuminates during driving, it indicates that the current power is less than 20%. Please find a charging pile for charging as soon as possible.

1.4.6 动力电池故障灯
1.4.6 Traction battery fault indicator

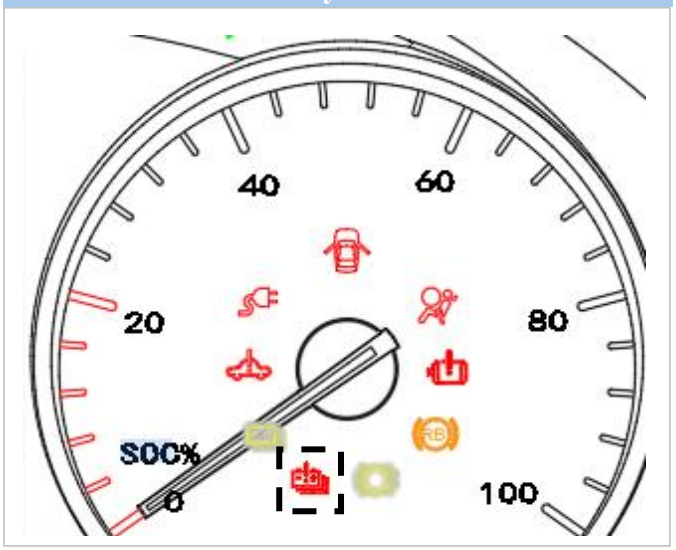

点火开关打到“ON（开启）”位置时，组合仪表的右侧“动力电池故障警告灯（红色）”点亮，系统进行自检，并约 3 秒后熄灭。

When the ignition switch is turned to "ON", the "traction battery fault warning light (red)" on the right side of the instrument cluster will light up. The system performs a self-test and the indicator goes out about 3s later.

注意：

Caution:

如果警告灯未熄灭或行驶时亮起，则表明系统出现故障，应尽快联系本公司授权服务商检修。

If the warning light does not go out or lights up during driving, it indicates that the system fails, please contact our authorized service provider for maintenance as soon as possible.

1.4.7 电气系统故障灯
1.4.7 Electrical system fault indicator

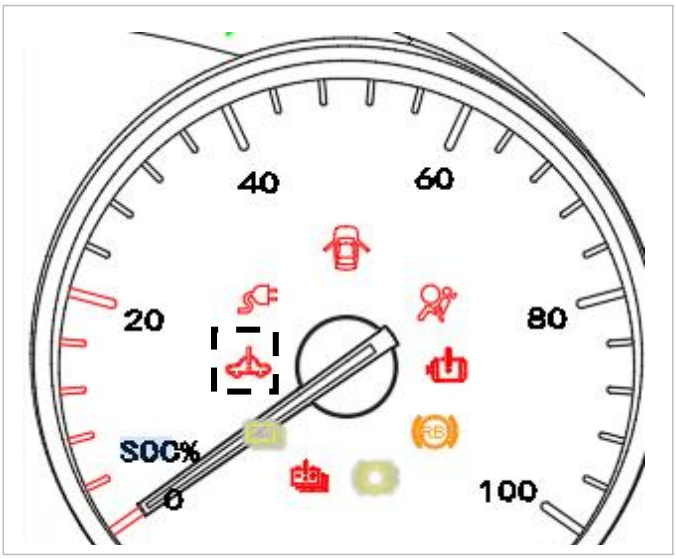

点火开关打到“ON（开启）”位置时，组合仪表的右侧“电气系统故障警告灯（红色）”点亮，系统进行自检，并约 3 秒后熄灭。

When the ignition switch is turned to "ON", the "electrical system fault warning light (red)" on the right side of the instrument cluster will light up. The system performs a self-test and the indicator goes out about 3s later.

注意：

Caution:

如果警告灯未熄灭或行驶时亮起，则表明系统出现故障，应尽快联系本公司授权服务商检修。

If the warning light does not go out or lights up during driving, it indicates that the system fails. Please contact our authorized service provider for maintenance as soon as possible.

1.4.8 电机故障灯
1.4.8 Motor fault indicator

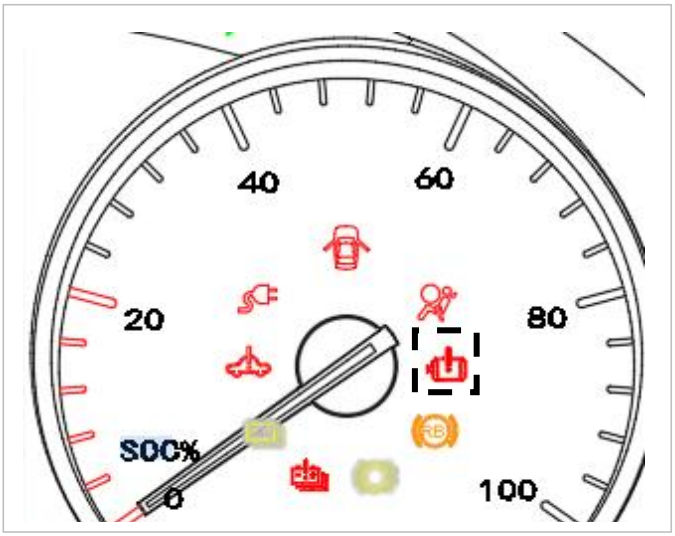

点火开关打到“ON（开启）”位置时，组合仪表的右侧“电机故障警告灯（红色）”点亮，系统进行自检，并约 3 秒后熄灭。

When the ignition switch is turned to "ON", the "motor fault warning light (red)" on the right side of the instrument cluster will light up. The system performs a self-test and the indicator goes out about 3s later.

注意：

Caution:

如果警告灯未熄灭或行驶时亮起，则表明系统出现故障，应尽快联系本公司授权服务商检修。

If the warning light does not go out or lights up during driving, it indicates that the system fails, please contact our authorized service provider for maintenance as soon as possible.

1.4.9 充电连接指示灯
1.4.9 Charging connection indicator

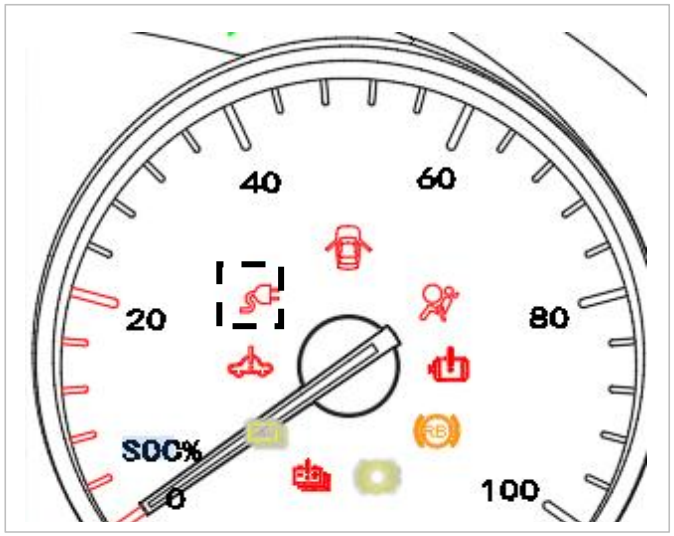

当充电枪插入车辆底座后，组合仪表的右侧“充电连接指示灯（红色）”点亮。

When the charging gun is inserted into the vehicle base, the "charging connection indicator (red)" on the right side of the instrument cluster will light up.

1.4.10 安全气囊警告灯
1.4.10 Airbag warning light

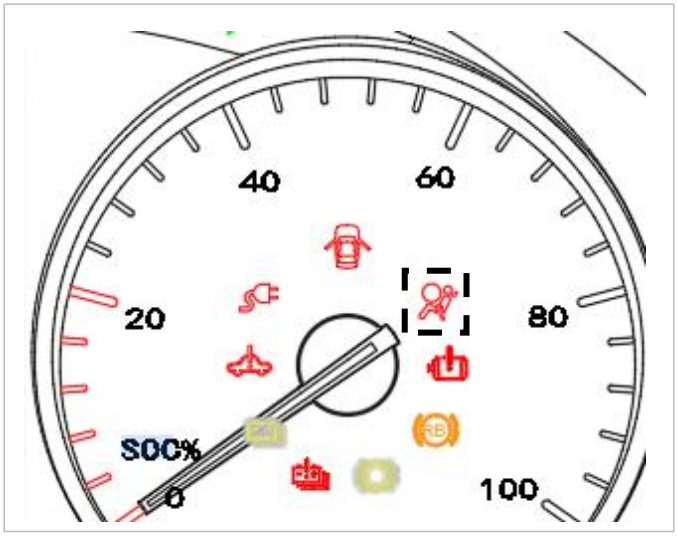

点火开关打到“ON（开启）”位置时，信息中心显示屏上的“安全气囊警告灯（红色）”点亮，系统进行自检，并在约 6 秒后熄灭。

When the ignition switch is turned to "ON", the "airbag warning light (red)" on the information center display screen will light up. The system performs a self-test and the indicator goes out about 6s later.

如果警告灯未亮起或闪烁、未熄灭或行驶时亮起或闪烁，则表明系统出现故障。应尽快联系本公司授权

服务商检修。

If the warning light does not light up or flash, does not go out, or lights up or flashes during driving, it indicates that the system is faulty. Contact our authorized service provider for maintenance as soon as possible.

有关安全气囊装置的信息，请参阅本册 “安全气囊”内容。

For information about the airbag devices, please refer to "Airbag" in this manual.

注意：

Caution:

忽视安全气囊指示灯的点灭等现象，一旦气囊系统存在故障，均可能造成严重的伤亡事故。

Ignoring the on/off of the airbag indicator may cause serious casualty accidents once there is a fault in the SRS system.

1.4.11 制动系统警告灯
1.4.11 Brake system warning light

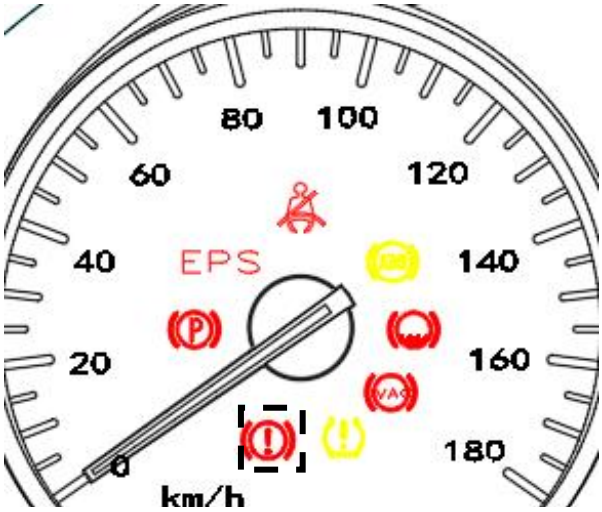

点火开关打到“ON（开启）”位置时，信息中心显示屏上的“制动系统警告灯（红色）”点亮，并在约 3 秒后自动熄灭。

When the ignition switch is turned to "ON", the "brake system warning light (red)" on the information center display screen will light up and then go out about 3s later.

如果制动系统警告灯未熄灭或驾驶时再次亮起，表示制动系统有故障，应立即停车，并尽快联系本公司授权服务商检修。

If the brake system warning light does not go out or lights up again during driving, it indicates that there is a fault in the brake system. In this case, stop the vehicle immediately and contact our authorized service provider for maintenance as soon as possible.

1.4.12 安全带警告灯
1.4.12 Seat belt warning light

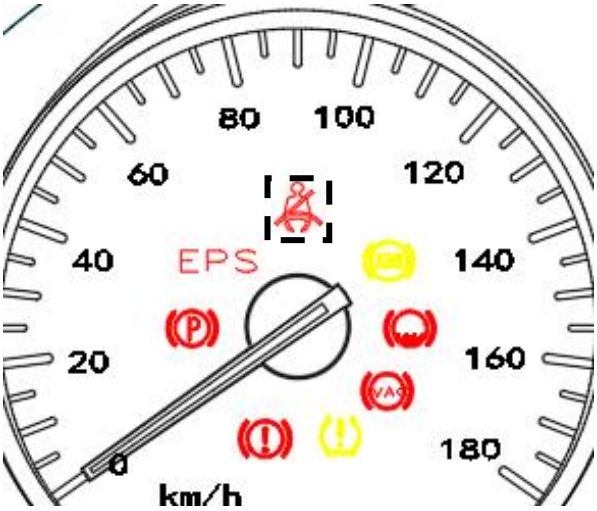

点火开关打到“ON（开启）”位置时，驾驶员安全带未正确系好，信息中心显示屏上的“安全带警告灯（红色）”点亮，当车速大于 5 公里/小时，同时会发出安全带未系的声音警告。当您系上安全带后，“安全带警告灯（红色）”熄灭，声音警告停止。

When the ignition switch is turned to "ON", the "seat belt warning light (red)" on the information center display screen will light up if the driver's seat belt is not fastened correctly. When the vehicle speed is greater than 5 km/h, an audible warning will be given at the same time indicating that the seat belt is unfastened. When you fasten the seat belt, the "seat belt warning light (red)" goes out and the audible warning stops.

1.4.13 ABS（防抱死制动系统）警告灯
1.4.13 ABS (anti-lock braking system) warning light

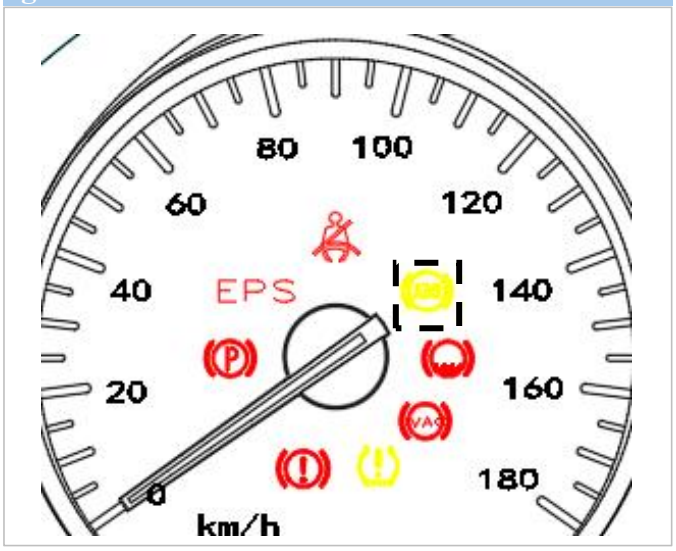

点火开关打到“ON（开启）”位置时，信息中心显示屏上的“ABS 警告灯（黄色）”点亮，并在约 2 秒后熄灭。如果 ABS 警告灯未熄灭或驾驶时再次亮起，则表明 ABS 系统出现故障，应尽快联系本公司授权服务商检修。

When the ignition switch is turned to "ON", the "ABS warning light (yellow)" on the information center display screen will light up and then go out about 2s later. If the ABS warning light does not go out or illuminates again during driving, it indicates that there is a fault in the ABS. Please contact our authorized service provider for maintenance as soon as possible.

1.4.14 ESC（车身电子稳定系统）故障
1.4.14 ESC (electronic stability control system) fault



点火开关打到“ON（开启）”位置时，信息中心显示屏上的“ABS 警告灯（黄色）”点亮，同时液晶仪表上的 ESC 警告灯（黄色）点亮，并在约 2 秒后熄灭。如果 ESC 警告灯未熄灭或驾驶时再次亮起，则表明 ESC 系统出现故障，应尽快联系本公司授权服务商检修。

When the ignition switch is turned to "ON", the "ABS warning light (yellow)" on the information center display screen will light up and the ESC warning light (yellow) on the LCD instrument will light up and then go out about 2s later. If the ESC warning light does not go out or illuminates again during driving, it indicates that there is a fault in the ESC system. Please contact our authorized service provider for maintenance as soon as possible.

2、 开关与启闭
2. Open/close and lock/unlock

2.1 钥匙
2.1 Key

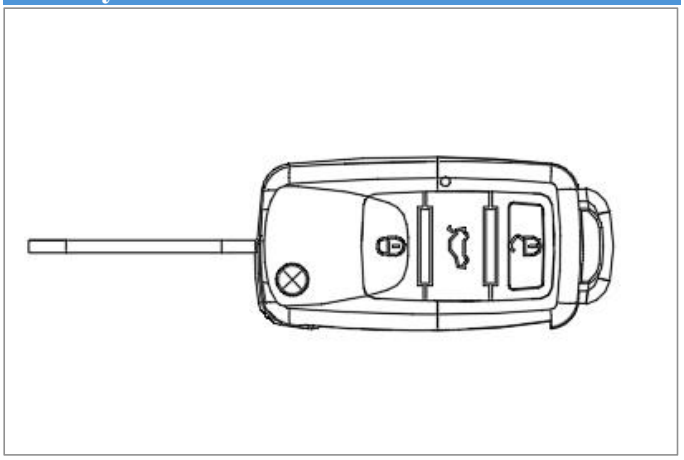

带遥控器钥匙

Remote control key

遥控器是汽车中控门锁系统的控制部件，使用它可以对所有车门上锁，也可以只对摆门解锁，也可以对所有门解锁。

The remote controller is a control component of the central control door lock system. It can be used to lock all doors, unlock only swing doors or unlock all doors.

带遥控器钥匙的钥匙头（以下简称钥匙头）的伸缩按下带遥控器钥匙上的释放按钮，钥匙头可从主体中伸出。如要将钥匙头收回，则按下带遥控器钥匙上的释放按钮，同时将钥匙头旋转到主体内。

The retractable key head with a remote control key (hereinafter referred to as the key head) can extend out from the main body by pressing the release button on the remote control key. To retract the key head, press the release button on the remote control key and rotate the key head into the main body.

提醒：

Note:

遥控器已针对汽车的上锁/解锁系统进行电子编码，并且与其唯一配套使用。更换丢失的带遥控器钥匙时，需要遵循特殊程序。本公司授权服务商将非常乐意为您服务。

The remote controller has been electronically coded for the locking/unlocking system of the vehicle and is used exclusively with it. Special procedures need to be followed when you replace the missing remote control key. Our authorized service provider will be very happy to serve you.

2.1.1 汽车钥匙电池更换使用说明
2.1.1 Instructions for car key battery replacement

适用场景：车钥匙遥控功能失灵（如无法解锁/锁车）、按键指示灯变暗或熄灭时，需更换纽扣电池。

Applicable scenarios: When the remote control function of the car key fails (such as failure to unlock/lock the vehicle), and the button indicator dims or goes out, the button battery needs to be replaced.

准备工具与材料

Preparation of tools and materials

1. 新电池：
1. New battery:

- 确认电池型号（CR2032），可通过原电池标签或车辆说明书查询确认。
- Confirm the battery model (CR2032), which can be confirmed by querying the original battery label or vehicle manual.
- 建议通过正规渠道购买，避免假货导致寿命短或漏液。
- It is recommended to purchase through formal channels to avoid short life or leakage caused by fakes.

2. 工具：
2. Tools:

- 小型一字螺丝刀、指甲或机械钥匙（用于撬开钥匙壳）。
- Small flat-blade screwdriver, nail or mechanical key (for prying open the key shell).
- 镊子或牙签（辅助取电池）。
- Tweezers or toothpicks (to assist in removing batteries).

操作步骤

Operation steps

1. 取出机械钥匙：
1. Take out the mechanical key:

- 按下钥匙侧面的解锁按钮，抽出隐藏的机械钥匙。
- Press the unlock button on the side of the key and pull out the hidden mechanical key.

2. 打开钥匙外壳：
2. Open the key housing:

- 将机械钥匙头部插入钥匙壳侧面中间的缝隙，轻轻撬动；或用一字螺丝刀沿缝隙旋转，撑开卡扣。
- Insert the mechanical key head into the gap in the middle of the side of the key shell and pry it gently; or use a flat-blade screwdriver to rotate along the gap to open the buckle.
- 注意：动作轻柔，避免损坏外壳或内部电路板。
- Caution: Move gently to avoid damaging the shell or internal circuit board.

3. 取出旧电池：
3. Take out the old battery:

- 用工具轻撬电池边缘，取出旧电池（注意正负极方向，通常“+”面朝上）。
- Use a tool to gently pry the edge of the battery and remove the old battery (pay attention to the positive and negative poles, usually with the "+" side facing up).
- 避免用手直接触碰电池正负极，防止静电干扰。
- Avoid touching the positive and negative poles of the battery directly with your hands to prevent static interference.

4. 安装新电池：
4. Install a new battery:

- 按原电池方向放置新电池，确保完全嵌入。
- Place the new battery in the direction of the original battery to ensure that it is fully embedded.

5. 组装钥匙并测试功能：
5. Assemble the key and test its functions:

- 对齐外壳卡扣，按压至听到“咔嗒”声闭合。
- Align the housing clips and press until you hear a "click" to close.

• 测试所有按键（解锁、锁车、后备箱等），确认指示灯正常亮起。

• Test all buttons (unlock, lock, trunk, etc.) to confirm that the indicator is on normally.

注意事项

Precautions

1. 电池选择：

1. Battery selection:

• 型号和电压需与原电池一致，装反可能导致电路损坏。

• The model and voltage must be consistent with the original battery. Reverse installation may cause circuit damage.

2. 操作环境：

2. Operating environment:

• 保持手部干燥，避免水或灰尘进入钥匙内部。

• Keep your hands dry to prevent water or dust from entering the key.

3. 特殊情况处理：

3. Handling of special circumstances:

• 更换后若功能异常，重新检查电池方向或触点清洁度。

• If the function is abnormal after replacement, recheck the battery direction or contact cleanliness.

4. 旧电池处理：

4. Disposal of old batteries:

• 废弃电池需按环保要求回收，不可随意丢弃。

• Waste batteries must be recycled according to environmental protection requirements and cannot be discarded at will.

2.2 车门锁

2.2 Door lock

2.2.1 防止车辆被盗

2.2.1 Vehicle anti-theft

⚠ *如果离开车辆时将乘员留在车内，即使离车时间极短，也请务必从点火开关中拔下钥匙，特别是在将儿童留在车内时更应特别注意。否则，他们可能会启动车辆或操作电气设备，这样会有造成事故的危险。*

⚠ *If the occupants are left in the vehicle, the key shall be removed from the ignition switch even if the driver leaves the vehicle for a very short time, especially when children are left in the vehicle. Otherwise, occupants may start the vehicle or operate electrical equipment, which poses an accident hazard.*

在离开车辆之前，请关闭所有车窗。

Please close all the windows before leaving the vehicle.

上锁之前，请确保所有车门均已完全关闭。

Make sure that all doors are fully closed before locking.

2.2.2 中控上锁/解锁

2.2.2 Central control locking/unlocking

通过使用带遥控器钥匙可从车内外对全车车门上锁/解锁，机械钥匙只能对驾驶门和尾门上锁/解锁。

All doors of the vehicle can be locked/unlocked from inside and outside by using a remote control key. The mechanical key can only lock/unlock the driver's door and tailgate.

通过使用中控锁开关可从车内对全车车门上锁/解锁。

All doors can be locked/unlocked from inside by using the central control lock switch.

根据车速能自动对全车车门上锁。

All doors can be locked automatically according to the vehicle speed.

注意：

Caution:

车辆使用遥控钥匙上锁后，机械钥匙解锁会触发报警器，遥控钥匙解锁后解除报警。

After the vehicle is locked with a remote control key, unlocking with the mechanical key will trigger an alarm, and the alarm will be disarmed after unlocking with the remote control key.

2.2.3 分别上锁/解锁
2.2.3 Separate locking/unlocking

通过使用机械钥匙或遥控钥匙头，可以在车外对前排乘员车门和尾门单独上锁/解锁。

The front passenger door and tailgate can be locked/unlocked separately from outside the vehicle by using a mechanical key or remote control key head.

提醒：上锁成功时，全车转向灯将闪烁三次，以作提示。

Note: When locking is successful, the turn signal lights of the vehicle will flash three times for prompt.

提醒：解锁成功时，全车转向灯将闪烁一次，以作提示。

Note: When the unlocking is successful, the turn signal light of the vehicle will flash once for prompt.

2.2.4 中控门锁系统
2.2.4 Central control door lock system

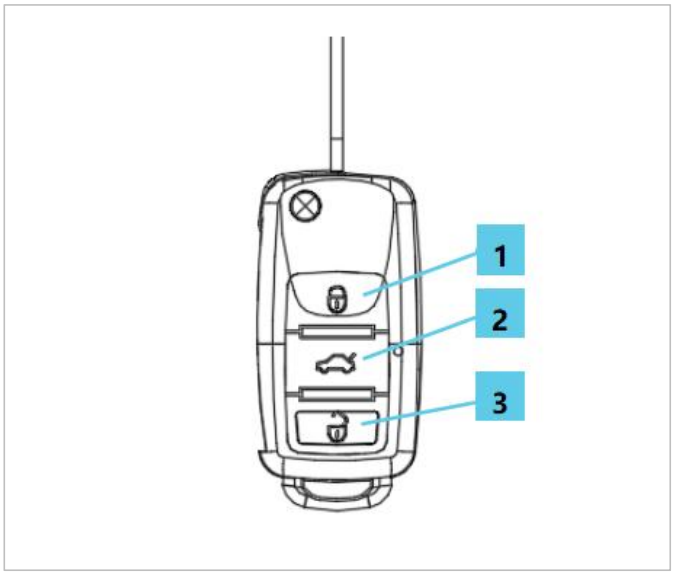

使用遥控器按钮时，可以通过中控门锁系统对全车车门上锁/解锁。

All doors can be locked/unlocked by the central control door lock system when the remote control button is used.

1 中控上锁按钮；

1 Central control lock button;

2 中控解锁按钮；

2 Central control unlock button;

3 尾门解锁按钮。

3 Tailgate unlock button.

全车门上锁——按下按钮(1)将对所有车门上锁，但前提条件是所有车门已关闭。

All doors lock - press the button (1) to lock all doors, provided that doors are closed.

提醒：

Note:

如果全车转向灯闪烁3次，则表示上锁确认，如果任何一车门没有完全关闭，则所有车门都无法上锁。

If the turn signal lights of the entire vehicle flash 3 times, it means that the lock is confirmed. If any door is not completely closed, all doors cannot be locked.

全车门解锁——按下按钮（2），将会对所有车门解锁。

All doors unlock - press the button (2) to unlock all doors.

遥控摆门解锁——按下按钮（3），将会对尾门解锁（遥控尾门）。

Remote control swing door unlocking - press the button (3) to unlock the tailgate (remote control tailgate).

2.2.5 使用机械钥匙、钥匙头
2.2.5 Use mechanical key and key head

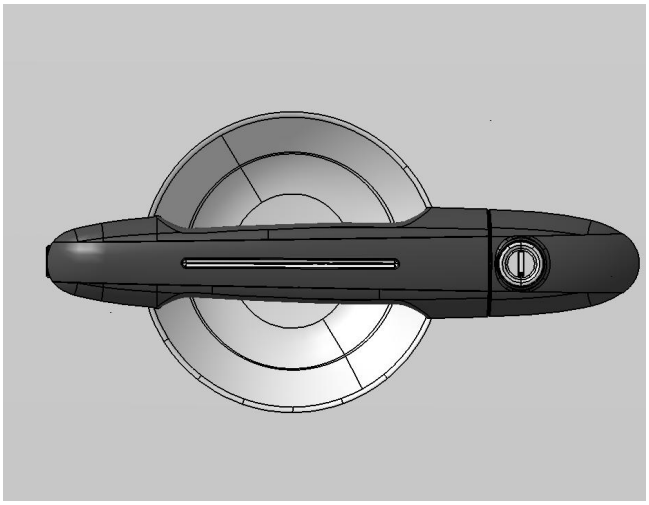

使用机械钥匙或钥匙头对驾驶员车门在车外手动执行上锁/解锁，可以对全车车门上锁/解锁。

Manually lock/unlock the driver's door outside the vehicle with a mechanical key or key head, and all doors of the vehicle can be locked/unlocked.

上锁时，将机械钥匙或钥匙头顺时针方向旋转。

When locking, turn the mechanical key or key head clockwise.

解锁时，将机械钥匙或钥匙头逆时针方向旋转。

When unlocking, turn the mechanical key or key head counterclockwise.

2.2.6 使用中控锁开关
2.2.6 Use the central control door lock switch

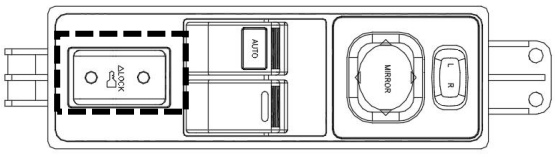

此开关可以从车内开启或关闭全车门锁。按压开关（LOCK）上部，全车门上锁。按压开关（LOCK）下部，全车门解锁。

This switch can be used to lock or unlock all doors from inside of the vehicle. Press the upper part of the switch (LOCK) to lock all doors. Press the lower part of the switch (LOCK) to unlock all doors.

提醒：

Note:

如果驾驶员门未关闭，门锁电机不动作；

If the driver's door is not closed, the door lock motor does not work;

如果其他门未关闭，门锁电机仍动作。

If other doors are not closed, the door lock motor still operates.

2.2.7 根据车速上锁
2.2.7 Lock as per vehicle speed

当车速超过 15 公里/小时该功能可自动将所有车门上锁。

When the vehicle speed exceeds 15 km/h, all doors can be locked automatically by this function.

车内解锁/上锁

Unlocking/locking inside the vehicle

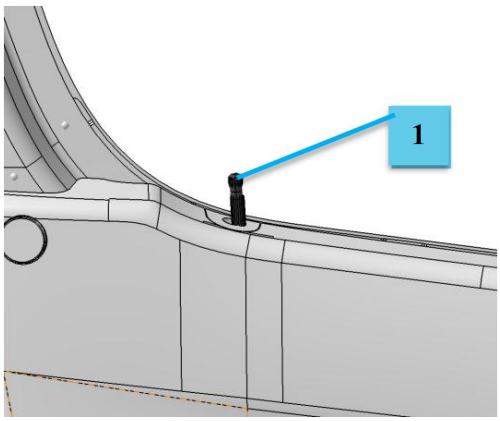

车内上锁时，先将车门关闭，然后按下按钮（1）。

To lock the vehicle inside, close the door and press the button (1).

车内解锁时，将按钮（1）拉起即可。

To unlock the vehicle inside, pull up the button (1).

2.3 车辆防盗系统
2.3 Vehicle anti-theft system

2.3.1 钥匙
2.3.1 Key

遥控器已经对汽车的上锁/解锁系统进行电子编码，并且与其唯一配套使用。只有车辆随附的钥匙才可以启动你的电动机。

The remote controller has been electronically coded for the locking/unlocking system of the vehicle and is used exclusively with it. Only the key provided with the vehicle can start your motor.

2.3.2 启动防盗系统
2.3.2 Activate the anti-theft system

钥匙从点火开关“LOCK（上锁）”位置打到“ON（开启）”位置时，如果认证成功，信息中心显示屏上的“防盗警告灯（黄色）”常暗。

When the key is turned from the ignition switch "LOCK" position to the "ON" position, the "anti-theft warning light (yellow)" on the information center display screen will always be dim if authentication succeeds.

如果“防盗警告灯（黄色）”闪烁，表示防盗控制系统出现问题，电动机将无法启动，应立即联系本公司授权服务商检修。

If the "anti-theft warning light (yellow)" flashes, it indicates that there is a problem with the anti-theft control system and the motor cannot be started. In this case, contact our authorized service provider for maintenance immediately.

2.3.3 解除防盗系统
2.3.3 Deactivate the anti-theft system

1、 使用钥匙打开驾驶员门锁。

1. Unlock the driver's door lock with a key.

2、 按动发射器上的解锁按钮。

2. Press the unlock button on the transmitter.

- 所有车门将打开。
- All doors will be unlocked.
- 防盗模式将解除
- Anti-theft mode will be disarmed

2.4 车门
2.4 Doors

2.4.1 侧移门（适用于滑门车型）
2.4.1 Side sliding door (for vehicles with sliding doors)

车外开/闭车门

Opening/closing doors outside the vehicle

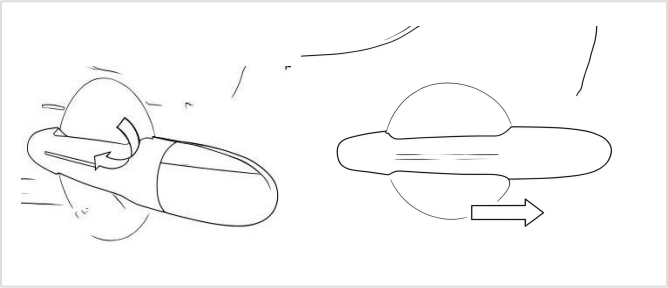

从车外打开车门时，握紧把手向车外拉开约 2cm 解锁，然后再将车门向后滑动。

When opening the door from outside, hold the handle tightly and pull it out of the car for about 2cm to unlock it, then slide the door backward.

从车外关闭车门时，握紧把手向车外拉开，解锁最大限位锁止结构，再将车门向车前拉动，加速滑动后关闭车门。

When closing the door from outside, hold the handle and pull it outward to unlock the limit locking structure, then pull the door forward to accelerate sliding and close the door.

车内开/闭车门

Opening/closing doors inside the vehicle

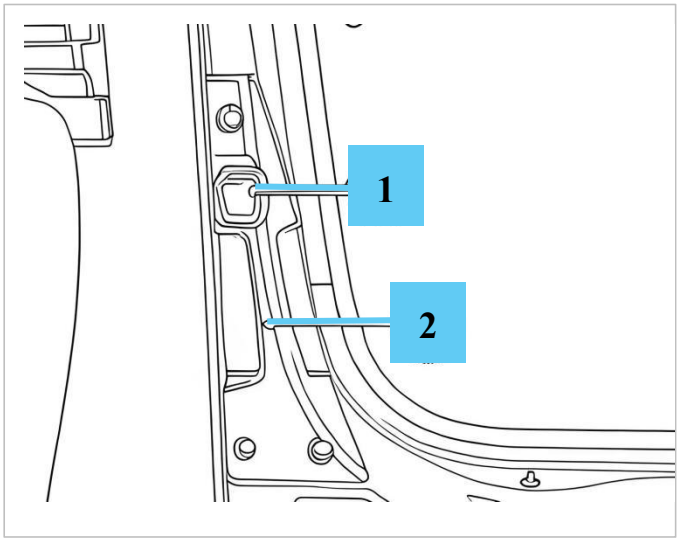

从车内打开侧移门时，解锁后将把手（1）拉起同时握住拉手（2）向车后拉即可。

When opening the side sliding door from inside the vehicle, pull up the handle (1) and pull the handle (2) backward after unlocking.

注意：*建议使用车内开门把手(2)拉开或关闭侧移门。*

Caution: *It is recommended to use the interior door handle (2) to open or close the side sliding door.*

固定车门

Fix the door

提醒：*当侧移门完全打开时，并听到下导轨后端发出“咯哒”声，表明车门被固定住。*

Note: *When the side sliding door is fully opened and a "click" sound is heard from the rear end of the lower guide rail, it indicates that the door is fixed.*

2.4.3 尾门
2.4.3 Tailgate

车外解锁/开门

Unlocking/opening the door from outside the vehicle

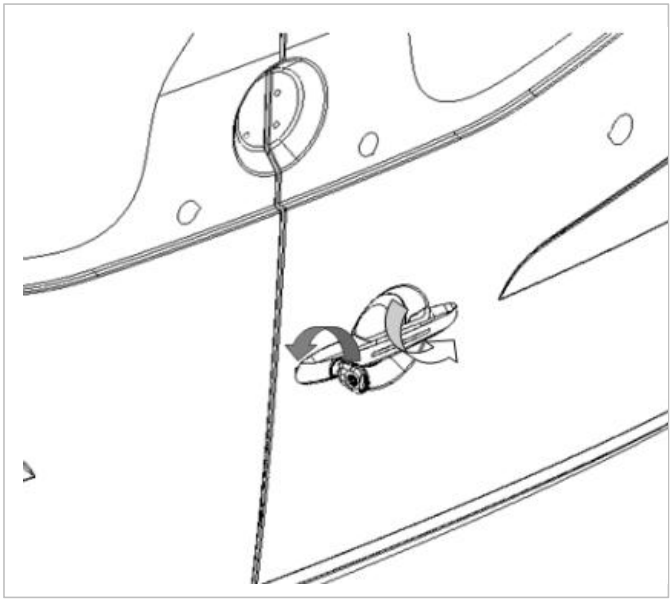

从车外手动解锁或打开尾门时，逆时针方向转动普通钥匙或钥匙头。拉起把手前先打开右侧尾门，然后拉起左侧尾门的弹簧锁操纵杆以打开左侧尾门。

When manually unlocking or opening the tailgate from outside, turn the ordinary key or key head counterclockwise. Open the right tailgate before pulling up the handle, and then pull up the spring lock lever of the left tailgate to open the left tailgate.

车外关门/上锁

Closing/locking outside the vehicle

从车外关闭尾门并上锁时，先关闭左侧尾门，推下左侧尾门机构上的弹簧锁操纵杆将左侧尾门固定。然后关上右侧尾门，再将普通钥匙或钥匙头顺时针转动以锁定。

When closing and locking the tailgate from outside, close the left tailgate first, and push down the spring lock lever on the left tailgate mechanism to fix the left tailgate. Then close the right tailgate and turn the ordinary key or key head clockwise to lock it.

提醒：*在关闭右侧尾门前，将车内 “上锁”按钮按下，也可将尾门锁定。*

Note: *Before closing the right tailgate, press the "Lock" button in the vehicle to lock the tailgate.*

车内解锁/上锁

Unlocking/locking inside the vehicle

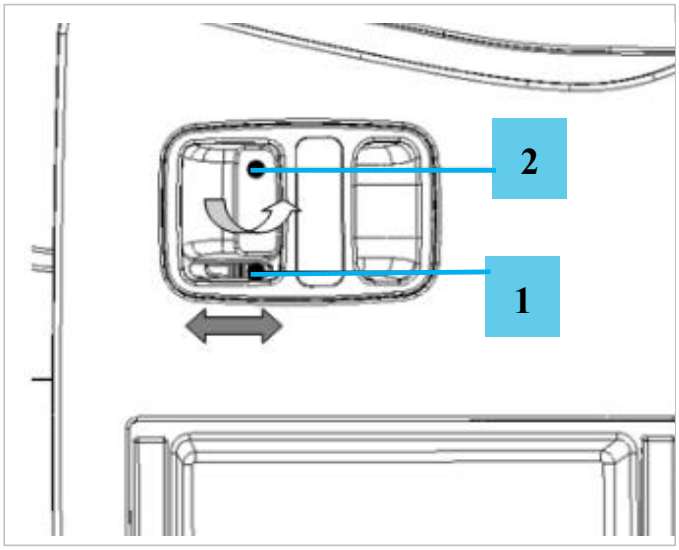

从车内解锁并打开尾门时，将右侧尾门按钮（1）推向左侧，并拉起车门把手（2），打开右侧尾门。再拉起左侧尾门的弹簧锁操纵杆以打开左侧尾门。

To unlock and open the tailgate from the inside, push the right tailgate button (1) to the left and pull up on the door handle (2) to open the right tailgate. Pull up the latch lever of left tailgate to open it.

从车内上锁时，关闭好两侧尾门后，再将右侧尾门按钮（1）推向右侧。

When locking from inside the vehicle, close the tailgate on both sides and then push the right tailgate button (1) to the right.

此时要从车外进入，只能使用普通钥匙或钥匙头从车外解锁。

At this time, only ordinary keys or key heads can be used to unlock from outside the vehicle if you need to enter the vehicle from the outside.

尾门 180°开/关

Tailgate 180° opening/closing

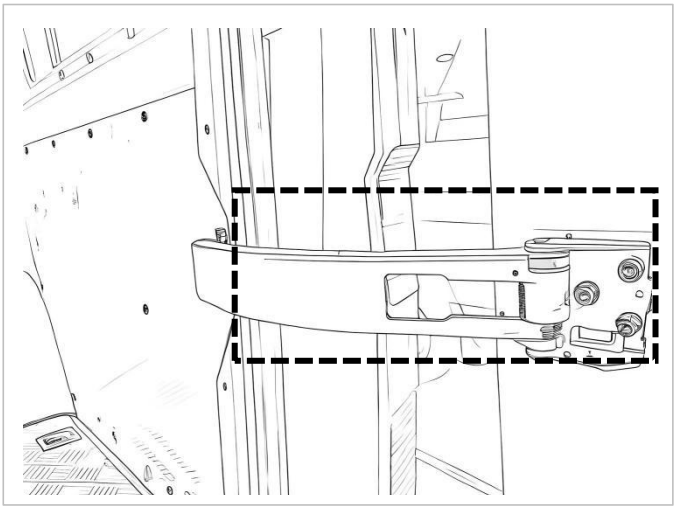

⚠ *打开任意一扇尾门超过 90°，尾门开启角度将不再受到限位装置控制。出现大风时，尾门可能会发生摆动，从而导致路过的行人、其他道路使用者或车辆受到损害。*

⚠ *If any tailgate is opened more than 90°, the opening angle of the tailgate will no longer be controlled by the limit device. In case of high winds, the tailgate may swing and cause damage to passing pedestrians, other road users or vehicles.*

在公路上不应将尾门打开至 180°，因为这样可能会阻碍交通或对行人造成伤害。

The tailgate should not be opened to 180° on highways. otherwise, traffic may be obstructed or injury caused to pedestrians.

某些情况下使用尾门可能会影响后组合灯的警示效果。在天色较暗的时候使用尾门，建议采用额外的警示标志（如高亮反射三角警示牌或类似装置）给其它车辆或行人以警示。

In some cases, the use of the tailgate may affect the warning effect of the rear combination light. When the tailgate is used in dark conditions, it is recommended to use additional warning signs (such as high-brightness reflective triangles or similar devices) to warn other vehicles or pedestrians.

将尾门打开至 90°，然后稍微将门往回朝关闭位置拉，再将拉钩从尾门挂钩中脱出，则尾门可以自由开启至 180°。

Open the tailgate to 90°, pull it back slightly towards the closed position, and then disengage the draw hook from the tailgate hook, so that the tailgate can open freely to 180°.

当将尾门从 180°的位置关闭时，拉钩将自动返回到 90°时的安装位置。

When the tailgate is closed from 180°, the draw hook will automatically return to the installation position at 90°.

2.5 电动机舱盖

2.5 Motor compartment cover

打开电动机舱盖

Opening the motor compartment cover

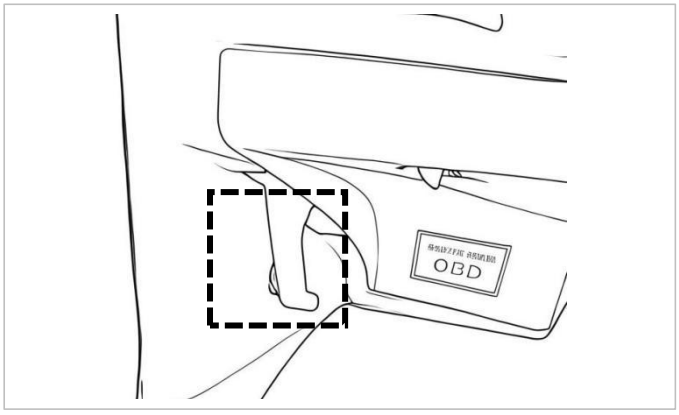

- 拉起仪表板下面左侧的电动机舱盖释放手柄。
- Pull up the motor compartment cover release handle on the left side under the dashboard.
- 略微提起电动机舱盖前部，将保险扣向上拨并提起电动机舱盖。
- Slightly lift the front part of the motor compartment cover, pull up the safety buckle and lift the motor compartment cover.
- 气撑杆会自动撑起电动机舱盖到顶部，听到“喀嗒”声后气撑杆达到最高点，机舱盖打开。
- The pneumatic rod will automatically support the motor compartment cover to the top. When a "click" sound is heard, the pneumatic rod reaches the highest point and the engine hood opens.

关闭电动机舱盖

Closing the motor compartment cover

⚠ *在钥匙处于“ON（开启）”位置时，散热器风扇随时可能启动（即使电动机未运转）。务必确保双手、宽松衣物（如领带、围巾等）远离风扇叶片。*

⚠ *The radiator fan may start at any time (even if the motor is not running) when the key is in the "ON" position. Always keep your hands and loose clothing (such as tie, scarf, etc.) away from the fan blades.*

如果电动机正在运转，请将手、衣物等远离旋转中的滑轮、传动皮带和风扇叶片等装置。

If the motor is running, please keep hands, clothes,

etc. away from rotating pulleys, drive belts, fan blades and other devices.

关闭时，向下按压电动机舱盖前部，直至听到锁扣卡入的声音。试着向上拉动电动机舱盖，检查锁定机构是否已正确卡入。

To close it, press down on the front of the motor compartment cover until a clicking sound is heard. Try to pull the motor compartment cover upwards and check that the locking mechanism is properly snapped in.

注意：

Caution:

关闭之前，请检查是否将工具、抹布、设备等物品遗留在电动机舱盖下面的区域内。

Before closing, please check whether tools, rags, equipment and other items are left in the area under the motor compartment cover.

2.6 充电口盖

2.6 Charging port cap

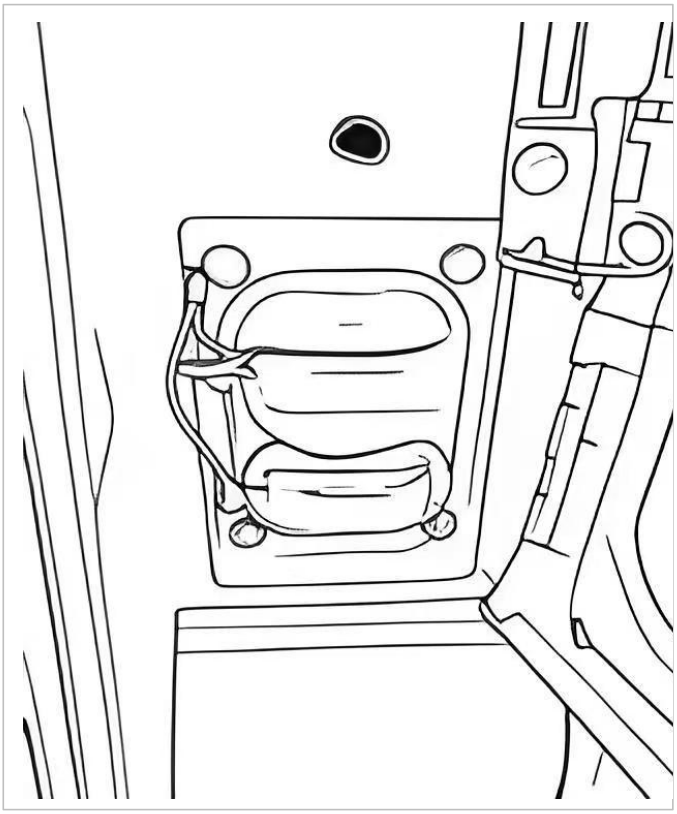

打开驾驶门，并打开立柱上的充电舱门，拨动充电口盖右侧的开关，充电口盖会自动弹出。充电完毕后，先将充电口盖关上，再关闭充电舱门。

Open the driver's door, open the charging hatch on the pillar, and toggle the switch on the right side of the charging port cover. The charging port cover will pop up automatically. After charging, close the charging port cover and then the charging hatch.

注意：

Caution:

- *若更换充电口，务必使用指定的正品充电口盖。*
- *Be sure to use a designated genuine charging port cover when replacing the charging port.*
- *充电管线的保养周期见维修保养手册，若出现老化、龟裂、划伤等问题可以提前更换。*
- *The maintenance cycle of the charging pipeline is shown in the Maintenance Manual. If there are problems such as aging, cracking and scratches, they can be replaced in advance.*

2.7 车窗

2.7 Window

电动车窗

Power window

⚠ *如将儿童单独留在车内时，务必将钥匙拔出。切勿让儿童操作电动车窗开关。儿童操作开关可能会卡入车窗内，从而导致严重伤害。*

⚠ *If a child is left alone in the vehicle, be sure to pull out the key. Do not allow children to operate the power window switch. The child may be lodged in the window when operating the switch, causing serious injury.*

关闭车窗时，务必要小心。操作时粗心大意可能会导致人身伤害（如擦伤）或将衣服卡住。

Be careful when closing the window. Careless handling may result in personal injury (e.g. abrasion) or clothing getting stuck.

驾驶员车门车窗

Window on the driver's door

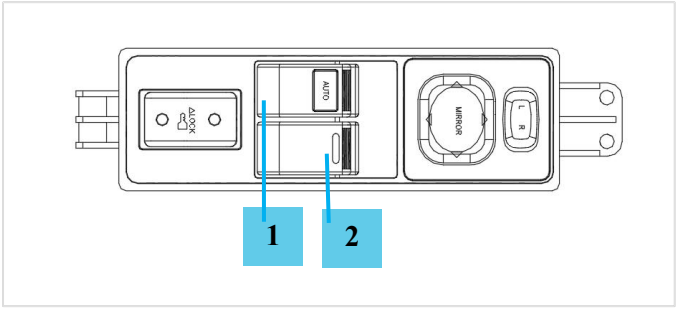

驾驶员车门上有 2 个车窗开关。通过这 2 个开关分别操作驾驶员车门车窗和前排乘员车门车窗。

There are 2 window switches on the driver's door. Operate the windows on the driver's door and front passenger door through these 2 switches respectively.

操作时，按下开关前部为打开车窗。掀起开关前部为关闭车窗。

During operation, press the front part of the switch to open the window. Lift the front of the switch to close the window.

图中 1 为驾驶员车门车窗控制开关；

Fig. 1 shows the control switch for the window on the driver's door;

图中 2 为前排乘员车门车窗控制开关。

Fig. 2 shows the control switch for the window on the front passenger door.

“一触”下降

"One-touch" lowering

按下驾驶员车门车窗控制开关到二档，车窗可在一次轻触下自动打开。

Press the control switch for the window on the driver's door to the second position, and the windows can be opened automatically with a single touch.

前排乘员车门车窗

Window on the front passenger door

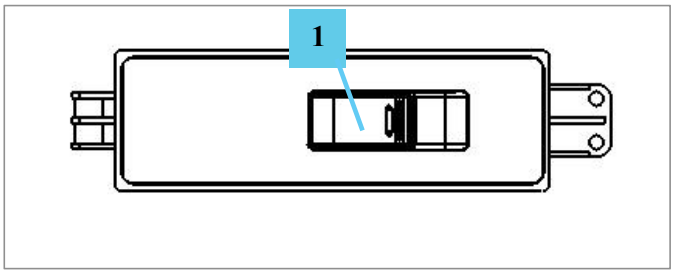

前排乘员车门上只有 1 个车窗开关，仅可操作前排乘员车门车窗。

There is only 1 window switch on the front passenger door. It can only control the window on the front passenger door.

操作时，按下开关前部为打开车窗。掀起开关前部为关闭车窗。

During operation, press the front part of the switch to open the window. Lift the front of the switch to close the window.

提醒：

Note:

只有点火开关处于“ON”位置时，电动车窗才会运行。

The power window will only operate when the ignition switch is in the "ON" position.

3、 照明与视野

3. Lighting and field of view

3.1 危险报警灯

3.1 Hazard warning light

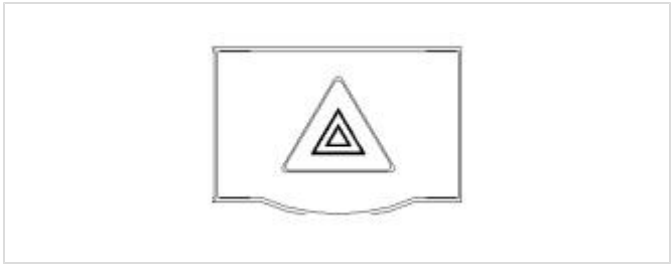

危险警告灯开关上有一个三角形标记，如上图所示。

There is a triangle mark on the hazard warning light switch, as shown in the figure above.

危险警告灯开关按下此开关以同时激活所有转向灯，组合仪表上的“转向指示灯（绿色）”点亮闪烁。再按下此开关即可关闭上述灯。

Press the hazard warning light switch to activate all turn signal lights at the same time, and the "turn signal indicator (green)" on the instrument cluster will light up and flash. Press this switch again to turn off the above lights.

在下列情况下，您可将危险警告灯开启：

You can turn on the hazard warning light under the following circumstances:

- 您有紧急情况；
- You have an emergency;
- 您的车辆遇到了交通堵塞；
- Your vehicle has encountered a traffic jam;
- 您的车辆因故障而处于不安全状态；
- Your vehicle is in an unsafe condition due to a fault;
- 雨雪雾天或能见度较低的环境下驾驶车辆；
- Driving on rainy, snowy, and foggy days or in an environment with low visibility;
- 您的车辆因故不得不停在非安全的停车地带
- Your vehicle has to be parked in an unsafe parking area for some reason

注意：

Caution:

危险警告灯开启状态下，拨动转向信号灯和变光拨杆时将无法发出转向或变道信号。如此时需转向或变道，请确保车辆安全。

When the hazard warning light is turned on, no turn signal or lane change signal can be sent when the turn signal and dimmer lever are toggled. Please make sure it is safe if you need to turn or change lanes.

3.2 中控开关

3.2 Central control switch

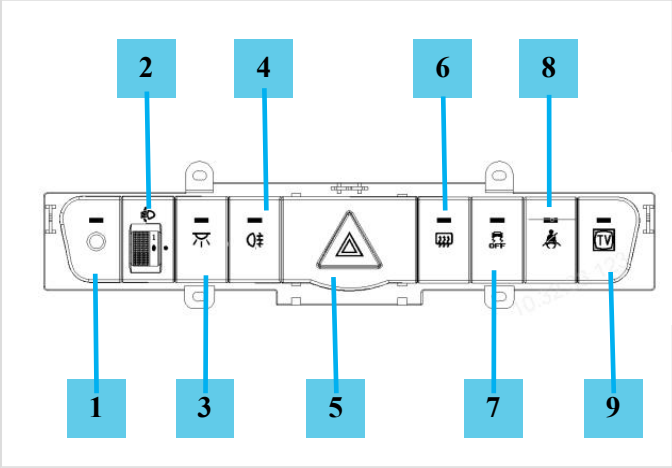

中控台开关具体如下：

The center console switches are as follows:

1、 自动大灯开关 2、大灯高度调节

1. Automatic headlight switch 2. Headlight height adjustment

3、 后顶灯开关 4、后雾灯开关

3. Rear roof light switch 4. Rear fog light switch

5、 危险报警灯开关 6、后除霜和左右后视镜加热

5. Hazard warning light switch 6. Rear defrosting and left and right rearview mirror heating

7、 ESC 开关 8、安全带报警开关

7. ESC switch 8. Seat belt alarm switch

9、 电视开关

9. TV switch

3.3 后视镜和后窗加热开关

3.3 Heater switch for rearview mirror and rear window

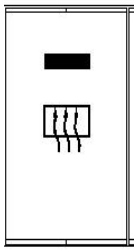

• 在电动机运转时，除霜加热器才能开启工作。按下此开关，开关上的“加热器指示灯（黄色）”点亮，以表示后视镜和后车窗加热器开启，再次按下开关以关闭后视镜和后车窗加热器，指示灯熄灭。

• The defrost heater can be turned on only when the motor is running. Press this switch, and the "heater indicator (yellow)" on the switch will light up to indicate that the rearview mirror and rear window heaters are turned on. Press this switch again to turn off the rearview mirror and rear window heaters, and the indicator will go out.

• 只要后窗、后视镜无结霜一类影响视线情况，就应当将加热装置关闭。耗电量的减少有助于节约能源，是经济和具有环保意识的驾驶方式。

• The heating device shall be turned off as long as there is no frost on the rear window and rearview mirror that affects vision. Reducing power consumption contributes to energy conservation and is an economical and environmentally conscious way of driving.

3.4 除霜加热开关

3.4 Heater switch for defrosting

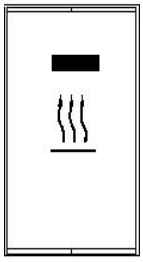

在电动机运转时，除霜加热功能才能开启工作。按下此开关，开关上的“加热器指示灯(绿色)”点亮，以表示辅助加热器开启，再次按下开关以关闭辅助加热器，指示灯熄灭。

The defrosting and heating function can only be activated when the motor is running. Press this switch, and the "heater indicator (green)" on the switch will light up to indicate that the auxiliary heater is turned on. Press the switch again to turn off the auxiliary heater, and the indicator will go out.

3.5 车内照明

3.5 Interior lighting

3.5.1 前顶棚阅读灯

3.5.1 Front ceiling reading light

手动操作

Manual operation

按下按钮（1），开启相应侧的前顶棚阅读灯，再次按下相应的按钮，关闭相应侧的前顶棚阅读灯。

Press the button (1) to turn on the front roof reading light on the corresponding side, and press the button again to turn off the front roof reading light on the corresponding side.

自动操作

Automatic operation

按下按钮（2），前顶棚阅读灯进入自动开启模式。当驾驶员车门、前排乘员车门、侧移门中任一车门开启时，前顶棚阅读灯点亮。并在车门关闭约 30 秒后，前顶棚阅读灯自动熄灭。

Press the button (2) to turn on the front roof reading light automatically. When any of the driver's door, front passenger door and side sliding door is opened, the front roof reading light will light up. The front roof reading light will go out automatically about 30s after the door is closed.

再次按下按钮（2），前顶棚阅读灯自动开启模式关闭（手动操作仍然有效）。

Press the button (2) again to turn off the automatic ON mode of the front roof reading light (manual operation is still valid).

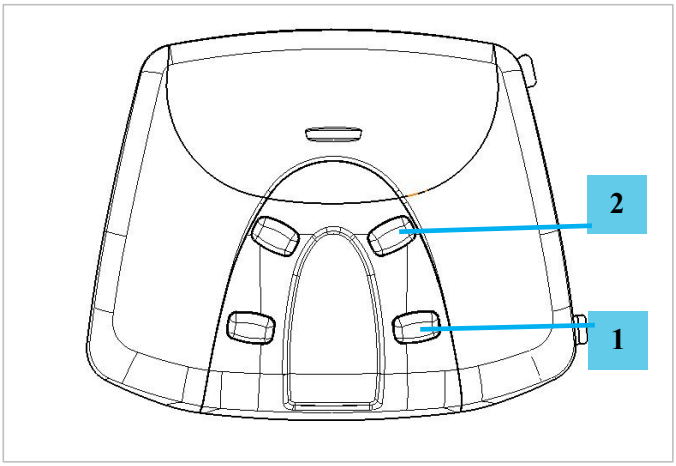

3.5.2 后顶棚阅读灯
3.5.2 Rear roof reading light

手动操作

Manual operation

后顶棚阅读灯的手动操作请参阅“后顶棚阅读灯开关”。

For manual operation of the rear roof reading light, please refer to "Rear roof reading light switch".

自动操作

Automatic operation

当尾门开启时，后顶棚阅读灯点亮。在车门关闭后，后顶棚阅读灯自动熄灭。

When the tailgate is opened, the rear roof reading light will light up. After the door is closed, the rear roof reading light will automatically go out.

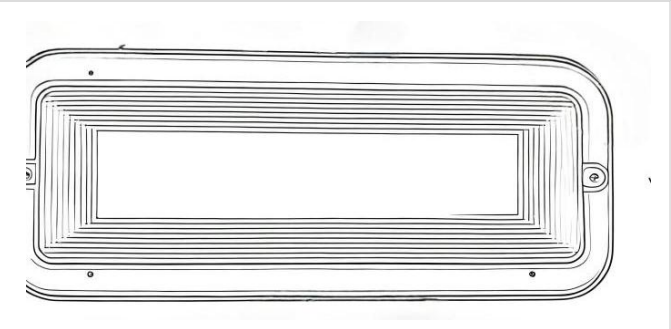

3.5.3 踏步灯
3.5.3 Step light

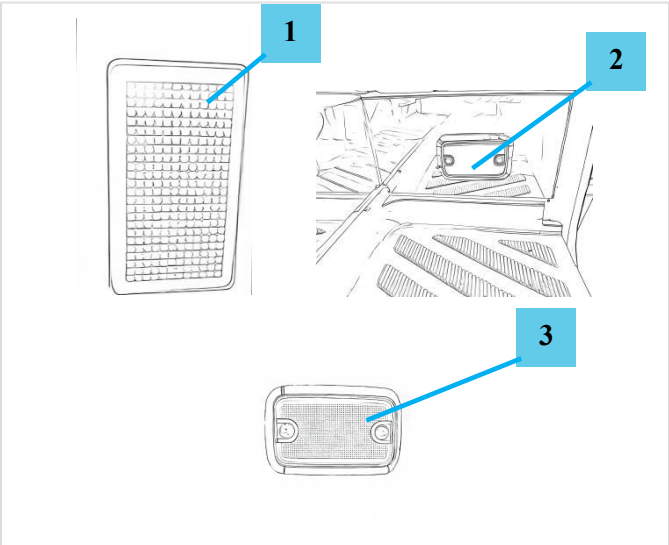

1. 推拉门灯 2.侧移门踏步灯 3.外摆门踏步灯

1. Sliding door light 2. Side sliding door step light 3. Exterior swing door step light

当驾驶员车门、前排乘员车门、侧移门（带侧移门车型）、外摆门（带外摆门车型）中任一车门开启时，相应的踏步灯就会点亮。在车门关闭后，踏步灯自动熄灭。

When any of the driver's door, front passenger door, side sliding door (for models with side sliding doors), and exterior swing door (for models with exterior swing door) is opened, the corresponding step light will light up. After the door is closed, the step light will automatically go out.

3.6 照明和转向指示灯

3.6 Lighting and turn signal indicator

3.6.1 转向灯和转向指示灯拨杆开关

3.6.1 Turn signal light and turn signal indicator toggle switch

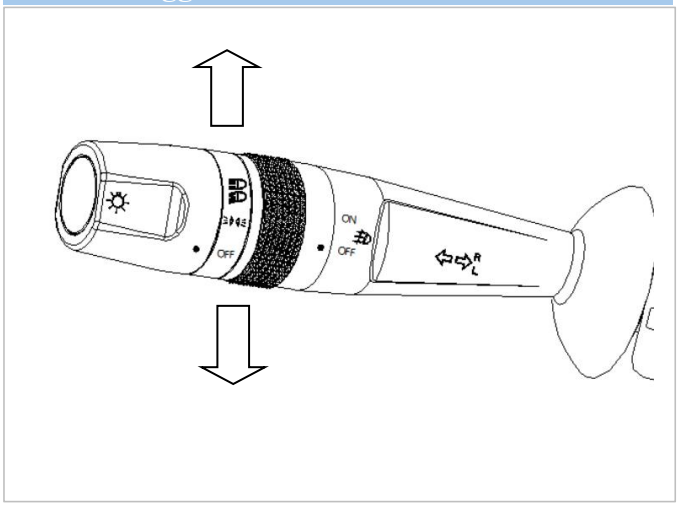

右转 — 将拨杆开关往上推。

Turn right - Push the toggle switch upward.

左转 — 将拨杆开关往下拉。

Turn left - Pull down the toggle switch.

相应的转向灯与组合仪表上的"转向指示灯（绿色）"将同时亮起。

The corresponding turn signal light will light up at the same time as the "turn signal indicator (green)" on the instrument cluster.

3.6.2 主照明拨杆开关

3.6.2 Main lighting toggle switch

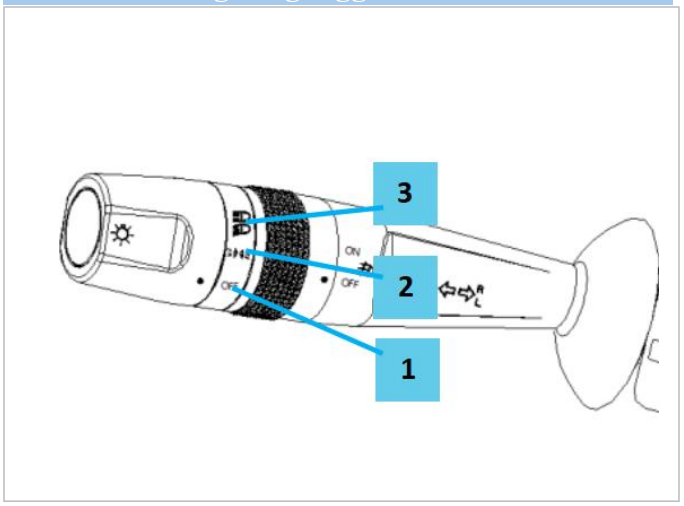

将开关旋至所需位置。

Turn the switch to the desired position.

位置 1 — 关闭；

Position 1 - Off;

位置 2 — 位置灯、牌照灯、仪表板照明；

Position 2 - Position light, license plate lamp and instrument panel lighting;

位置 3 — 前照灯。

Position 3 - Headlight.

注意：

Caution:

只有点火开关位于"ON（开启）"位置时，前照灯才会点亮。如果停车时未关前照灯，蓄电池将放电，再次启动发动机时，发动机可能因蓄电池亏电而无法启动。

The headlight will light up only when the ignition switch is in the "ON" position. If the headlight is not turned off during parking, the battery will discharge. The engine may fail to start next time due to insufficient power of the battery.

在点火 OFF 位置或者钥匙拔出时，若前照灯开关仍处于开启状态，将响起声音报警。

When the ignition switch is in OFF position or the key is pulled out, an audible alarm will sound if the headlight switch is still on.

3.6.3 前照灯远光与近光拨杆开关

3.6.3 Headlight high beam and low beam toggle switch

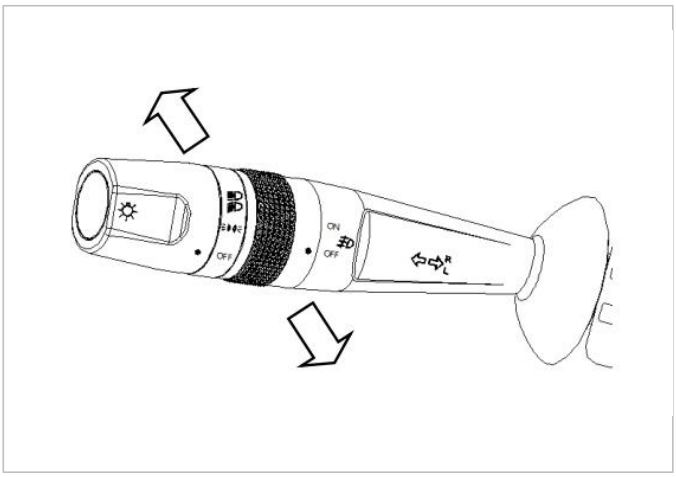

将拨杆开关推离转向盘，前照灯将从近光改为远光。将拨杆开关拉近转向盘，即回到近光位置。

Push the toggle switch away from the steering wheel, and the headlight will change from low beam to high beam. Pull the toggle switch close to the steering wheel, and the headlight will return to the low beam position.

为使前照灯闪烁，可朝转向盘方向间歇轻提拨杆

开关。

To make the headlight flash, gently pull the toggle switch intermittently towards the steering wheel.

3.6.4 前雾灯拨杆开关
3.6.4 Front fog light toggle switch

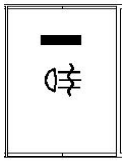

将开关旋至“ON（开）”位置，以打开前雾灯；前雾灯亮起时，信息中心显示屏上的“前雾灯指示灯（绿色）”点亮。将开关旋至“OFF（关）”位置，以关闭前雾灯。

Turn the switch to the "ON" position to turn on the front fog light; when the front fog light lights up, the "front fog light indicator (green)" on the information center display will light up. Turn the switch to the "OFF" position to turn off the front fog light.

3.6.5 后雾灯拨杆开关
3.6.5 Rear fog light toggle switch

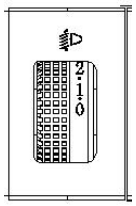

此开关控制后雾灯，按下即可将后雾灯点亮。再按下即可关闭。按下此开关，开关上的“后雾灯指示灯（绿色）”点亮，以表示后雾灯开启，再次按下开关以关闭后雾灯，指示灯熄灭。

This switch controls the rear fog light. Press this button to turn on the rear fog light. Press it again to turn off the light. Press this switch, and the "rear fog light indicator (green)" on the switch will light up to indicate that the rear fog light is turned on. Press this switch again to turn off the rear fog light, and the indicator will go out.

3.6.6 大灯高度调节开关
3.6.6 Headlight height adjustment switch

在近光灯开启时，拨动此指轮开关可以调整前照灯光束角度，以对改变车辆负载进行补偿，并减少对迎面而来车辆造成眩目影响。

When the low beam is turned on, toggle this dial switch to adjust the headlight beam angle to compensate for changes in vehicle load and reduce glare effects on oncoming vehicles.

0 挡为初始挡位，随着车辆负载增加，请按照 1-2-3 挡的顺序对照明高度进行调整。

Position 0 is the initial position. As the vehicle load increases, adjust the lighting height in the order of 1-2-3.

3.7 刮水器和洗涤器拨杆开关
3.7 Wiper and washer toggle switch

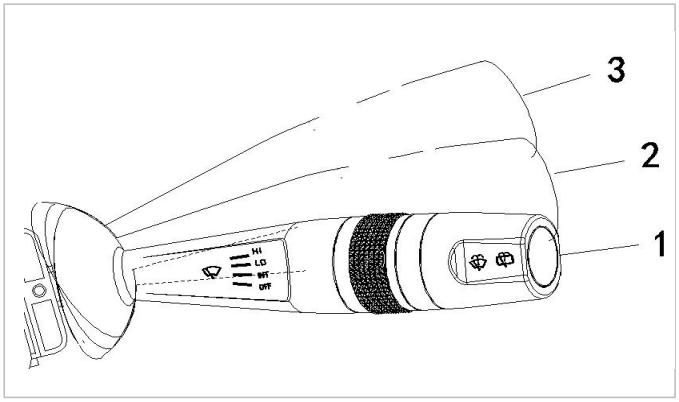

将拨杆开关打至所需位置:

Turn the toggle switch to the desired position:

位置 1 “INT（间歇）” — 间歇刮水。

Position 1 "INT (intermittent)" - intermittent wiping.

位置 2 “LO（低）” — 正常速度刮水。

Position 2 "LO (low)" - normal speed wiping.

位置 3 “HI（高）” — 快速刮水。

Position 3 "HI (high)" - fast wiping.

注意:

Caution:

- *磨损的刮水器刮片无法有效清除前风窗玻璃上的雨水时，将降低前方的能见度，可能引发事故。务必及时更换磨损的刮水器刮片。*
- *The worn wiper blade may not effectively remove rainwater from the front windshield, which will result in poor visibility ahead. and thus, an accident may occur. Be sure to replace the worn wiper blade in time.*
- *在冰冻天气或炎热天气，为防止损坏刮水器，如果刮片结冰或粘附在玻璃上，请清除玻璃上的障碍物（如积雪）。在前风窗玻璃干燥时，切勿操作刮水器。否则可能刮坏玻璃并导致刮片过早磨损，而且会影响驾驶员的视线。*
- *In freezing or hot weather, please remove obstacles (such as snow) on the glass to prevent damage to the wiper if the wiper blade is frozen or adhered to the glass. Do not operate the wiper when the front windshield*

is dry. Otherwise, the glass may be scratched and the wiper blade will wear prematurely, which will affect the driver's sight.

3.8 遮阳板
3.8 Sun visor

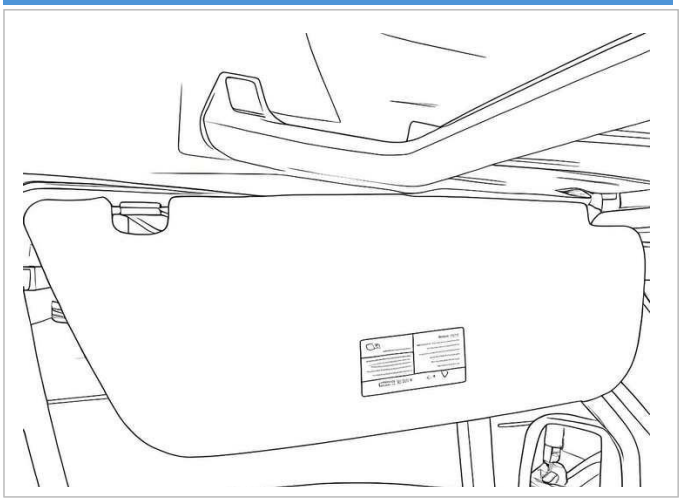

为了给驾驶员和乘客遮挡来自正面或侧面的阳光，您的车辆安装有遮阳板。为减少阳光晃眼或太阳直射，请将遮阳板拉下。若要遮挡来自侧面的阳光，还可以将其转动至侧面车窗（如图所示）。

In order to shield the driver and passengers from front or side sunlight, your vehicle is equipped with a sun visor. Please pull down the sun visor to reduce dazzling or direct sunlight. To block sunlight from the side, turn it to the side window (as shown in the figure).

3.9 后视镜
3.9 Rearview Mirror

为扩展视线范围，车外后视镜的玻璃为凸镜型，这使得物体看上去比实际更小、更远。

In order to extend the sight range, the glass of the exterior rearview mirror is of a convex lens type, making the object appear smaller and farther than it actually is.

注意：

Caution:

务必检查确保所有后视镜干净明亮，并在行驶前将其定位好。如果需要，对其进行清洁和调整。

Always check that all rearview mirrors are clean and bright, and locate them before driving. Clean and adjust them if necessary.

3.9.1 外后视镜
3.9.1 Exterior rearview mirror

电动调整

Electric adjustment

1、 按下船型开关（1）的左侧或右侧，以选择要调整的后视镜。

1. Press the left or right side of rocker switch (1) to select the rearview mirror to be adjusted.

2、 按下圆形开关（2）的相应侧，以使后视镜玻璃向上 / 下/左 / 右倾斜至所需位置。

2. Press the corresponding side of the round switch (2) to tilt the rearview mirror glass up/down/left/right to the desired position.

3、 将船型开关（1）打回至中间位置。

3. Turn the rocker switch (1) back to the middle position.

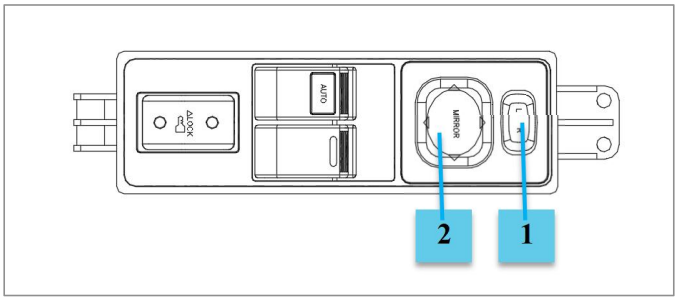

手动调整

Manual adjustment

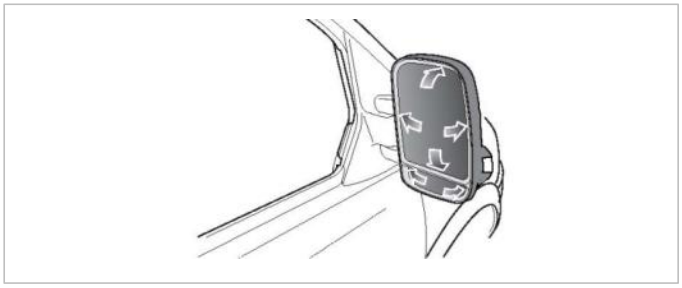

根据需要，用手直接推动玻璃，调节所需角度。

Push the glass directly by hand as required to adjust the desired angle.

折叠后视镜

Folding the rearview mirrors

为了确保行人的安全，车外后视镜在遭受到足够力量撞击时，将会从其正常安装位置向车身后部旋转。可以通过给后视镜镜框施加少许压力来使它们复位。

In order to ensure the safety of pedestrians, the exterior rearview mirror will rotate towards the rear of the vehicle from its normal mounting position when subjected to sufficient force impact. It can be reset by applying a little pressure to the rearview mirror frame.

内后视镜

Interior rearview mirror

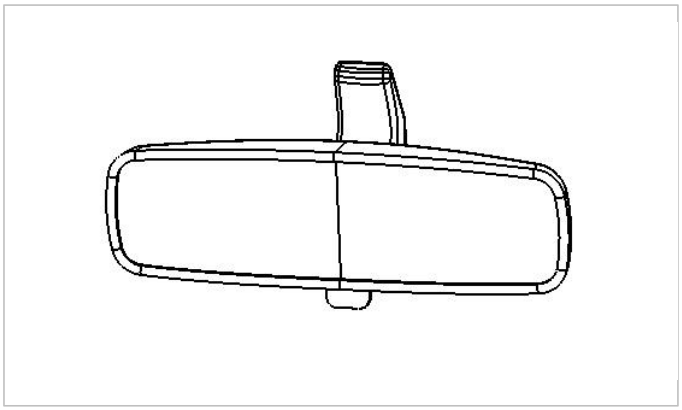

调整后视镜以获得所需的后部视线。

Adjust the rearview mirror to obtain the required rear view.

操作后视镜底部的调整杆以减少夜晚行车时的反射眩光。

Operate the adjusting rod at the bottom of the rearview mirror to reduce reflected glare during nighttime driving.

3.11 魔盾 360 全景环视系统

3.11 Magic shield 360 panoramic view system

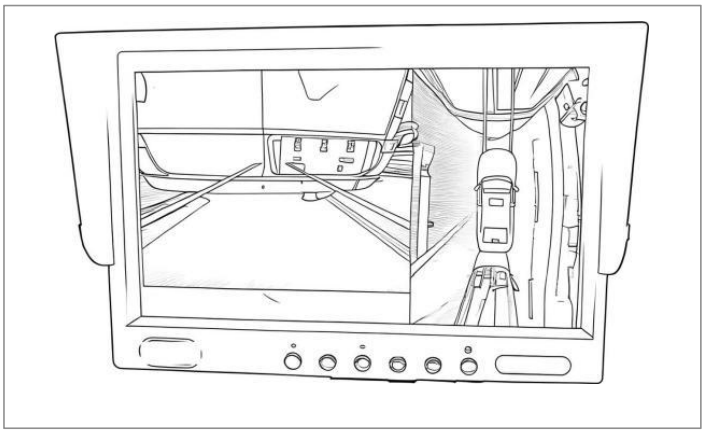

360 全景环视系统受环境干扰(强光/雨雪/污损)、存在盲区或低矮障碍物（台阶/锥桶）未识别、畸变/误差致距离偏差，视野外/快速移动物体监测不到，需结合人工观察。

The 360 panoramic view system is affected by environmental interference (strong light/rain and snow/fouling), blind spots or low obstacles (steps/traffic cones) are not identified, distortion/errors cause distance deviation, and objects outside the field of vision/rapidly moving cannot be detected, which requires manual observation.

盲区监控：通过车身 4 路高清广角摄像头，运用影像拼接算法实现 360°无盲区环视，支持 2D/3D 车模显示及单视图/全景自由切换，特殊场景自动匹配最佳视角（如转弯/倒车）。

Blind spot monitoring: Through the 4-way high-definition wide-angle camera of the vehicle body, the image stitching algorithm is used to achieve 360° blind spot-free surround view, support 2D/3D vehicle model display and single view/panoramic free switching, and automatically match the best viewing angle for special scenes (such as turning/reversing).

3.10 泊车辅助系统

3.10 Parking assist system

3.10.1 倒车摄像

3.10.1 Reversing camera

⚠ *倒车摄像泊车系统并不是始终可靠的，它仅仅起向导作用！摄像头视野范围是有限的，探测不到视野范围以外的障碍物。*

⚠ *The reversing camera parking system is not always reliable. It only serves as a guide! The camera has a limited field of view and cannot detect obstacles beyond the field of vision.*

倒车摄像泊车辅助系统工作状态：

Working state of reversing camera parking assist system:

当选择倒挡后，巡航系统显示屏画面切换到倒车摄像的工作状态，显示屏显示车辆后方的景物图像，以供驾驶员倒车时参考。

When the reverse gear is selected, the cruise control system displays screen switches to the working state of the reversing camera, and the display screen displays the scene image behind the vehicle for the driver's reference during reversing.

当选择其他档位时，倒车摄像泊车辅助停止工作，显示屏恢复到倒车前的状态。

When other gears are selected, the reversing camera parking assist stops working and the display screen returns to the state before reversing.

提醒:

Note:

在车辆进入倒车状态时，摄像头输出静态倒车轨迹，并显示在导航系统显示评上，采用红、黄、绿三种颜色分段标识。

When the vehicle is in the reversing state, the camera

outputs a static reversing track and displays it on the screen of the navigation system. It is marked by sections with three colors: red, yellow and green.

3.10.2 倒车雷达
3.10.2 Reversing radar

⚠ *泊车辅助系统并不是始终可靠的，它仅仅起向导的作用！倒车雷达传感器可能探测不到某些类型的障碍物，比如：铁丝网或者绳索类细小物体、靠近地面的小物体、锥状物体、某些表面不反射的物体。*

⚠ *The parking assist system is not always reliable. It only serves as a guide! The reversing radar sensor may not detect certain types of obstacles, such as iron gauze or ropes, small objects close to the ground, conical objects and some objects with non-reflective surfaces.*

倒车雷达传感器上应当没有污垢、冰和雪。如果倒车雷达传感器的表面有沉积物，会妨碍它的正常工作。所以在清洗车辆时，应避免用高压水枪近距离直接喷射倒车雷达传感器。

The reversing radar sensor shall be free of dirt, ice and snow. Deposits on the surface of the reversing radar sensor, if any, will hinder its normal operation. Therefore, when cleaning the vehicle, avoid spraying the reversing radar sensor directly with a high-pressure water gun at close range.

⚠ *位于后保险杠中的四个倒车雷达传感器扫描车辆后部区域，判断是否有障碍物。如探测到障碍物，传感器就会计算它至车辆后部的距离，并以报警声响信号向驾驶员传送这一信息。非常重要的是，该系统仅仅是一个泊车辅助系统，不能把它作为观察和个人判断的替代物。*

⚠ *The four reversing radar sensors located in the rear bumper scan the rear area of the vehicle to determine whether there is any obstacle. If an obstacle is detected, the sensor calculates its distance to the rear of the vehicle and informs the driver in the form of an audible warning signal. It is important to note that the system is only a parking assist system and cannot be used as a substitute for observation and personal judgment.*

倒车摄像泊车辅助系统工作状态：

Working state of reversing camera parking assist system:

选择倒档后，泊车辅助系统会发出短促的“嘟”，提示系统自动开始工作。当选择其他档位时，泊车辅助系统停止工作。

After the reverse gear is selected, the parking assist system will send out a short "beep", indicating that the system starts working automatically. When other gears are selected, the parking assist system will stop working.

提醒：

Note:

系统工作正常，蜂鸣器响一声；在车辆进入倒车状态时， 任意一个传感器故障时，则蜂鸣器响两声。

The system works normally and the buzzer sounds once; when the vehicle enters the reversing state, if any sensor fails, the buzzer sounds twice.

在倒车过程中：

During reversing:

1、 障碍物位于后保险杠或后踏板边沿 150cm-200cm 时，蜂鸣器的响应频率为 1Hz。

1. When the obstacle is located 150cm-200cm from the edge of the rear bumper or rear pedal, the response frequency of the buzzer is 1Hz.

2、 障碍物位于后保险杠或后踏板边沿 90cm-150cm 时，蜂鸣器的响应频率为 2Hz。

2. When the obstacle is located 90cm-150cm from the edge of the rear bumper or rear pedal, the response frequency of the buzzer is 2Hz.

3、 障碍物位于后保险杠或后踏板边沿 60cm-90cm 时，蜂鸣器的响应频率为 4Hz。

3. When the obstacle is located 60cm-90cm from the edge of the rear bumper or rear pedal, the response frequency of the buzzer is 4Hz.

4、 障碍物位于后保险杠或后踏板边沿 40cm-60cm 时，蜂鸣器的响应频率为 8Hz。

4. When the obstacle is located 40cm-60cm from the edge of the rear bumper or rear pedal, the response frequency of the buzzer is 8Hz.

5、 障碍物位于后保险杠或后踏板边沿小于 40cm 时，蜂鸣器的响应频率为长鸣。

5. When the obstacle is less than 40cm from the edge of the rear bumper or rear pedal, the response frequency of the buzzer is long.

4、 乘坐与调节

4. Riding and adjustment

4.1 座椅

4.1 Seat

4.1.1 驾驶员座椅调整

4.1.1 Adjustment of driver's seat

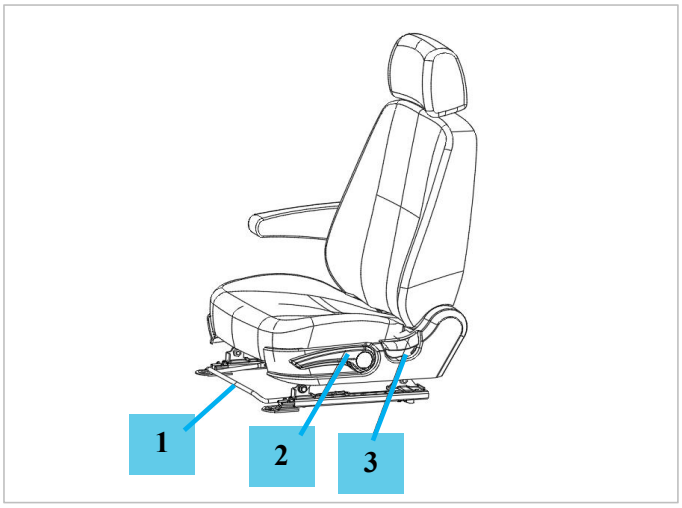

⚠ *车辆行驶时，切勿进行驾驶员座椅的调整。如此时调整，车辆可能会处于失控状态而导致事故。*

⚠ *Do not adjust the driver's seat while driving. Adjusting the seat in this case may result in loss of control and accidents.*

前后滑动

Sliding the seat forward or backward

向上拉起横杆（1），并将座椅滑动至所需位置。松开横杆（1）并确认座椅已锁定到位。

Pull up the crossbar (1) and slide the seat to the desired position. Release the crossbar (1) and confirm that the seat is locked in place.

靠背倾斜角调整

Adjustment of backrest inclination angle

⚠ *驾驶员座椅的倾斜角不宜过大，当座椅靠背与垂直方向约成 25°时，安全带才能提供最大保护。*

⚠ *The inclination angle of the driver's seat should not be too large, and the seat belt can provide maximum protection only when the backrest is about 25° from the vertical direction.*

将身体微向前倾，向上拉起调节器（3），座椅靠背会自动弹回，然后将身体向后靠向椅背，调整至所需要的角度。松开调节器（3）并确认椅背已锁定到位。

Tilt your body slightly forward, pull up the adjuster (3), and the seat backrest will bounce back automatically. Then lean your body backward to adjust it to the desired angle. Loosen the adjuster (3) and confirm that the seat backrest is locked in place.

座垫高度调整

Adjustment of seat cushion height

反复往下按动调节器（2），坐垫高度往下降低，反复往上按动调节器（2），坐垫高度往上抬高；注意当调节器（2）往上或往下都不能再调节时，即坐垫已经在最高或最低状态，不能再进行调节。

Repeatedly press the adjuster (2) downward to decrease the cushion height, and repeatedly press the adjuster (2) upward to increase the cushion height. Note that when the adjuster (2) cannot be adjusted up or down any more, it means that the cushion is already in the highest or lowest state and can no longer be adjusted.

注意：

Caution:

升高坐垫高度时，请不要将身体的重量全压在座椅坐垫上；降低坐垫高度时，靠身体的重量压下座椅坐垫使坐垫高度下降。

When raising the seat cushion height, please do not put all your body weight on the seat cushion; when lowering the seat cushion height, press down the seat cushion with your body weight to reduce the seat cushion height.

4.1.2 头枕

4.1.2 Headrest

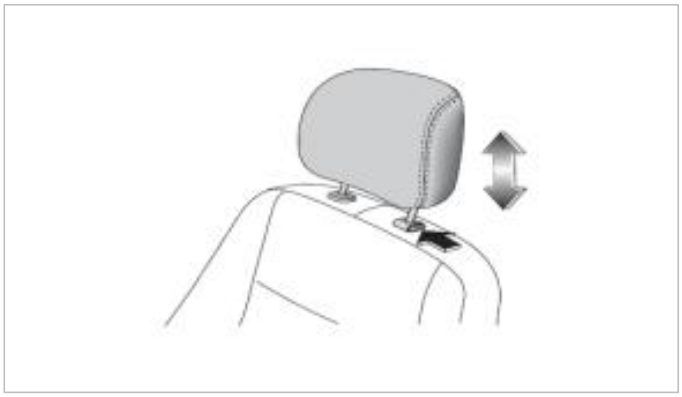

⚠ *为减少颈部或头部受伤的危险，应当将头枕调整至支撑头后部而非颈部。车辆行驶时，切勿调整头枕。*

To reduce the risk of neck or head injury, adjust the headrest to support the rear part of the head rather than the neck. Do not adjust the headrest while driving.

按下箭头所示按钮，可将头枕向下推或向上拉，以调整头枕至所需位置。当拉到一定的位置时，可拔出头枕

Press the button indicated by the arrow to push down or pull up the headrest to adjust it to the desired position. When pulled to a certain position, the headrest can be pulled out

4.2 巡航控制系统（选配）

4.2 Cruise control system (optional)

在倒挡时切勿使用巡航控制系统。在雨天和光滑的路面或者交通条件不允许保持一个恒定的速度时，切勿使用巡航控制系统。

Never use the cruise control system in reverse gear. Do not use the cruise control system in rainy weather, on slippery roads, or in traffic conditions that do not allow for a constant speed.

巡航控制系统可以使驾驶员在不踩加速踏板的情况下保持一个恒定的速度前进。车辆在高速公路上行驶或者长距离的保持恒定速度的道路上行驶十分有效。

The cruise control system can maintain a constant speed without the driver pressing the accelerator pedal. It is highly effective for vehicles to run on highways or on roads that require maintaining a constant speed for long distances.

当车辆达到您预期设定的速度时，按下巡航开关，巡航控制系统工作。再次按下时，则退出巡航。

When the vehicle reaches your expected set speed, press the cruise control switch to activate the cruise control system. Press it again to exit the cruise control.

在定速巡航系统工作时，正常踩加速踏板仍可使车辆加速，例如在超车的情况下。当加速踏板释放后，车速会回到设定的巡航速度。

When the cruise control system is working, you can still accelerate the vehicle by depressing the accelerator pedal normally, for example, during overtaking. When the accelerator pedal is released, the vehicle speed will return to the set cruise speed.

注意：

Caution:

巡航控制系统在车速大于 60 公里/小时，并且变速杆位于四挡及以上时，巡航控制系统工作。

The cruise control system works when the vehicle speed is greater than 60 km/h and the gearshift lever is in Gear IV or above.

4.3 喇叭

4.3 Horn

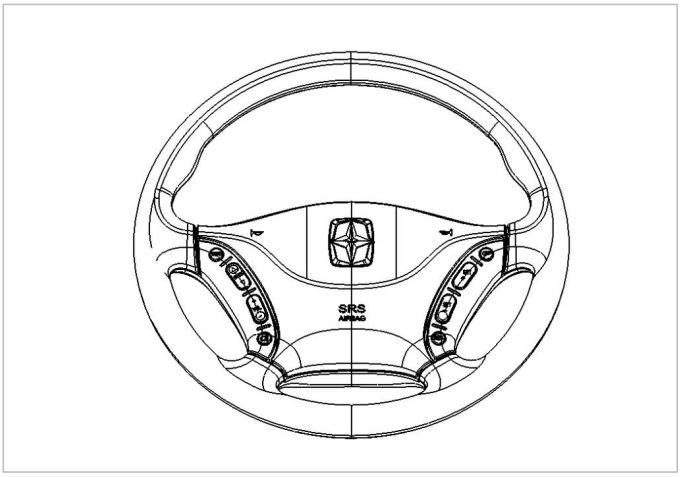

按下方向盘上的喇叭标志，喇叭响起。定期检查喇叭的工作状况，确认喇叭可以正常工作。注意：切勿重击或用拳头敲击喇叭开关，切勿用尖锐的物品按动喇叭开关。

Press the horn icon on the steering wheel, and the horn will sound. Regularly check the working condition of the horn to confirm that it can work normally. Note: Do not hit the horn switch hard or with your fist, and do not press the horn switch with sharp objects.

4.4 车顶储物

4.4 Roof storage

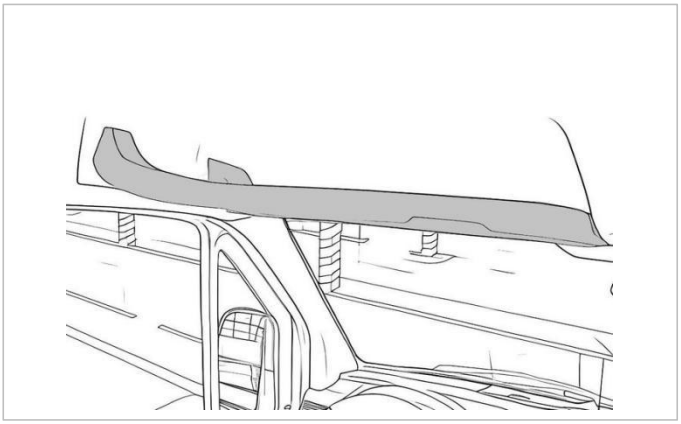

车顶储物箱只能存放纸张等轻便物品。切勿将锋利、沉重或危险的物体放在车顶储物箱中。以免造成对驾驶员及乘员的危险。平/高顶车辆配有两个开口

车顶箱，用于存放物品。

⚠ *The roof storage box can only store lightweight items such as paper. Never place sharp, heavy or dangerous objects in the roof storage box, so as to avoid danger to the driver and passengers. Flat/high-top vehicles are equipped with two open roof boxes for storing items.*

4.5 杂物盒
4.5 Sundries box

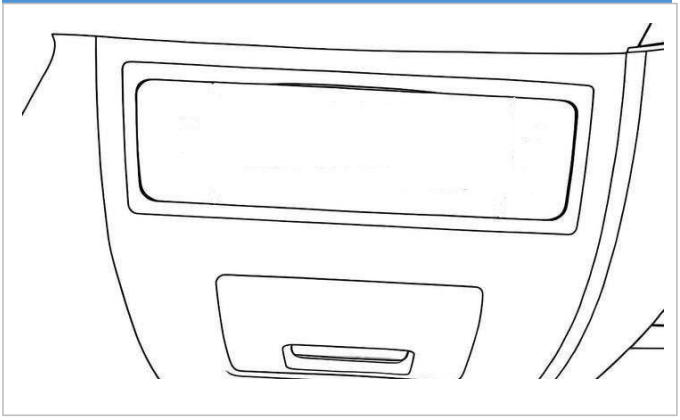

放置钱包、手机等轻巧物品。

It is designed to store lightweight items such as wallets and mobile phones.

4.6 手套箱
4.6 Glove box

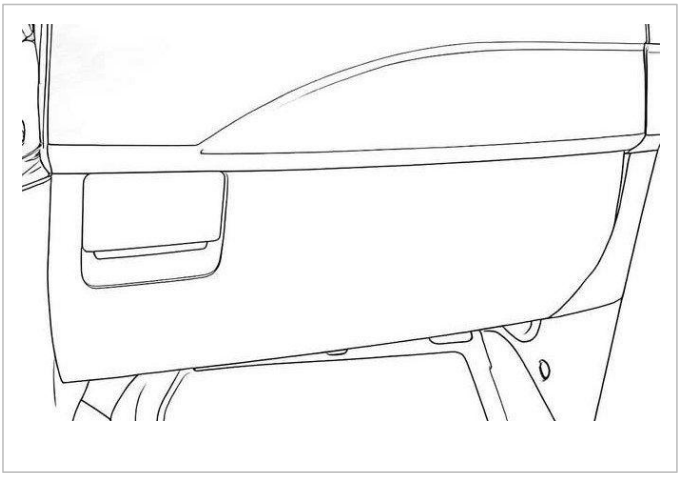

⚠ *切勿将锋利、沉重或危险的物体放在乘员侧的手套箱中。发生事故或突然停车时，如果手套箱未关闭，可能会造成人身伤害。所以驾驶时请关闭手套箱。*

⚠ *Do not place sharp, heavy or dangerous objects in the glove box on the passenger side. In case of an accident or sudden stop, personal injury may be caused if the glove box is not closed. Therefore, please close the glove box when driving.*

提起翻盖把手即可打开手套箱。用力一推即可关闭。

Lift the flip handle to open the glove box. Push hard to close it.

4.7 点烟器
4.7 Cigarette lighter

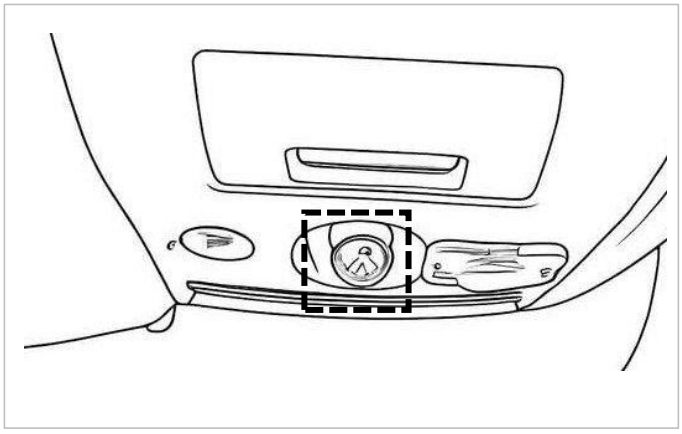

- 按下点烟器后要及时松开，否则可能导致损坏。
- Release the cigarette lighter in time after pressing it; otherwise, damage may be caused.
- 不要在点烟器插座上接插任何配件。
- Do not connect any accessories to the cigarette lighter socket.
- 将儿童单独留在车上时，为防万一，务必将点烟器取下。
- Be sure to remove the cigarette lighter just when leaving a child alone in the vehicle.
- 由于点烟器很烫，可能导致烧伤，因此使用时务必通过旋钮握稳点烟器。
- Be sure to hold the cigarette lighter firmly with the knob during its use, as the cigarette lighter is very hot and may cause burns.
- 操作时，将点烟器旋钮完全按下后松开。加热后，旋钮将部分自动弹出，并可以取出使用。
- During operation, press the cigarette lighter knob completely and then release it. After heating, the knob will partially pop up automatically and the cigarette lighter can be taken out for use.

4.8 烟灰缸

4.8 Ashtray

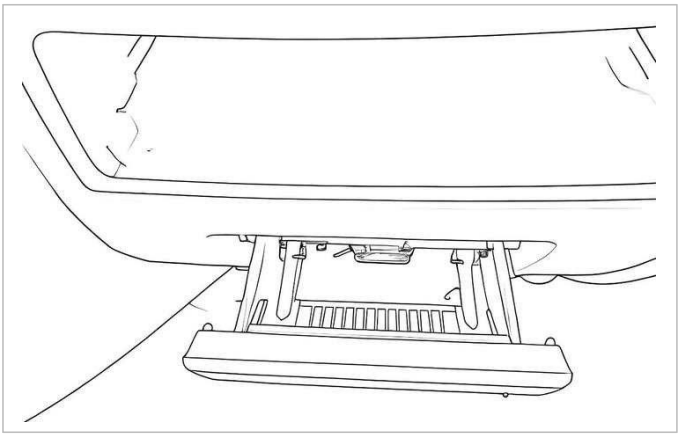

⚠ *烟灰缸内存在引发火灾的风险。将点燃的烟或火柴与可燃物质一起放入烟灰缸内，有可能引发火灾。切勿将烟灰缸当成垃圾桶使用。*

⚠ *There is a risk of fire in the ashtray. Putting ignited smoke or matches into the ashtray together with combustibles may cause a fire. Never use an ashtray as a trash can.*

- *打开烟灰缸时，先将其往外拉即可。*
- *When opening the ashtray, pull it outward first.*
- *清除烟灰时，先将其拉出，然后将平板往下压以将其取出。*
- *When removing the ashtray,* first pull it out, then press the flat plate downward to take it out.
- *重装烟灰缸时，先将烟灰缸的后部安装在仪表板的槽内，然后将其推到位。*
- *When reinstalling the ashtray, install the rear of the ashtray in the slot on the instrument panel and then push it into place.*

5、 空调与多媒体

5. A/C and multimedia

5.1 空调系统

5.1 A/C system

5.1.1 基本说明

5.1.1 General information

空调系统可以冷却空气并清除空气中的湿气和灰尘（如花粉）。

The A/C system cools the air and removes moisture and dust (such as pollen) from the air.

暖风系统利用的是 ptc 加热器加热，因此通过 ptc 充分加热车内空气，提高车内环境温度。通风系统在汽车行驶时保证车内通风。

The heater system uses a PTC heater to heat the air inside the car, thereby raising the temperature of the interior environment. The ventilation system ensures interior ventilation when the vehicle is running.

前、后鼓风机控制旋钮控制出风量大小。空调、暖风和通风用来控制车内空气的冷却、加热和通风。新鲜空气是通过前风窗下进气格栅经空调滤清器进入车内。进气格栅内要保持清洁，无树叶、雪、冰等阻挡物。

The front and rear blower control knobs control the air volume. A/C, heating and ventilation are used to control the cooling, heating and ventilation of air in the vehicle. Fresh air enters the vehicle through the lower air inlet grille of the front windshield and through the A/C filter. The air inlet grille shall be kept clean and free of leaves, snow, ice and other obstacles.

前部出风

Front vent

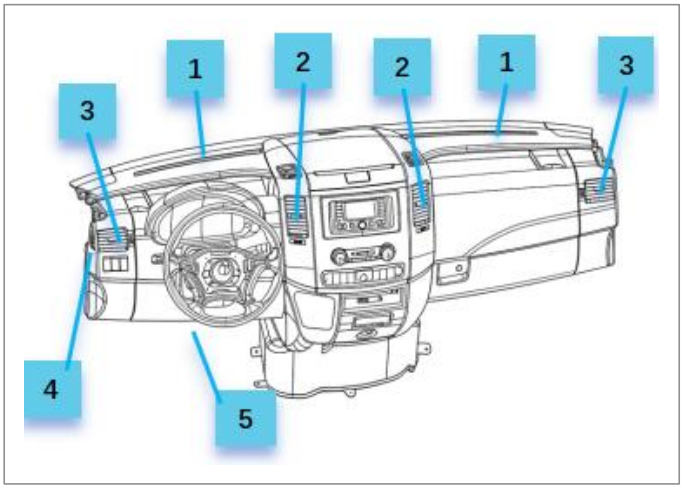

1、 前风窗出风口 2、中央出风口 3、侧出风口

1. Front windshield air outlet 2. Central air outlet 3. Side air outlet

4、 前车窗出风口 5、前座脚部出风口

4. Front window air outlet 5. Front seat foot air outlet

转动出风口旁边的滚轮将调节出风口的出风量大小。上、下、左、右拨动出风口格栅中央的拨板可以改变出风的方向。

Turning the roller next to the air outlet will adjust the air volume of the air outlet. The direction of the air outlet can be changed by moving the dial plate in the center of the air outlet grille up, down, left and right.

5.1.2 控制面板功能简介
5.1.2 Introduction to control panel functions

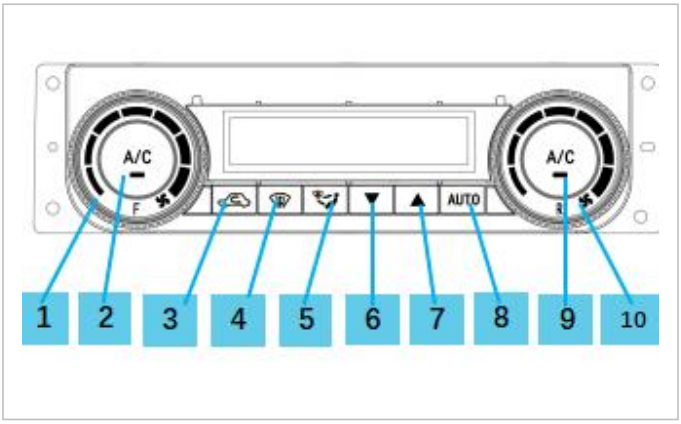

1、 前鼓风机风量控制旋钮 2、前空调 A/C 开关

1.Front blower air volume control knob

2. Front A/C switch

3、 内/外循环控制按键 4、前除霜（除雾）控制按键

3. Internal/external circulation control button

4. Front defrost (defog) control button

5、 吹风模式控制按键 6、温度-控制按键

5. Blowing mode control button

6. Temperature-control button

7、 温度+控制按键 8、自动模式按键

7. Temperature + control button

8. Automatic mode button

9、 后顶蒸/暖风机风量控制旋钮

9. Air volume control knob of rear roof evaporator/heater

10、 后空调 A/C 开关

10. Rear A/C switch

5.1.3 空调面板开关
5.1.3 A/C panel switch

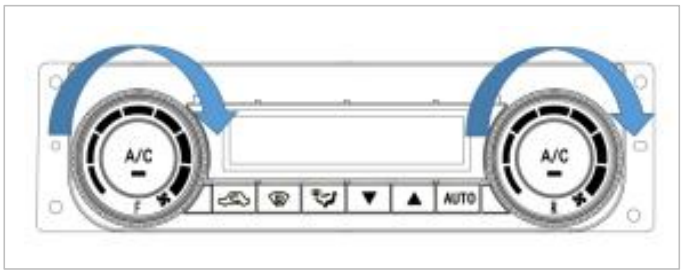

开启：打开车辆电源总开关，将钥匙旋至 ON 档，然后旋转控制控制器前/后风量控制旋钮，此时空调面板开启，显示屏幕点亮，开启后，控制器默认为内循环，吹风模式默认为吹面，前后 A/C 开关关闭，设置温度显示为：25℃；

Turn on: Turn on the master power switch of the vehicle, turn the key to the ON position, and then rotate the front/rear air volume control knob of the controller. At this time, the A/C panel is turned on and the display screen lights up, and by default, the internal circulation mode will be enabled. The blowing mode defaults to air-to-face, the front and rear A/C switches will be off, and the set temperature display is: 25°C;

关闭：旋转控制控制器前/后风量控制旋钮至 0 档，显示屏幕熄灭，在制冷/通风模式下前后风机停机，如在制热模式下，风机延迟 20 秒后停机。

Turn off: Turn the front/rear air volume control knob of the controller to gear 0, the display screen goes out, and the front and rear fans stop in cooling/ventilation mode. If it is in heating mode, the fans will stop after a delay of 20s.

5.1.4 吹风模式按键
5.1.4 Blowing mode button

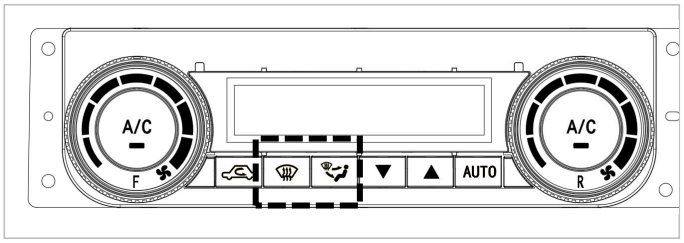

对吹风模式按键进行操作，可调节空气分配模式。

Operate the blowing mode button to adjust the air distribution mode.

吹面模式。

Face mode.

吹面和吹脚模式。

Air-to-face and air-to-foot mode.

吹脚模式。

Air-to-foot mode.

吹脚和除霜（除雾）模式。

Air-to-foot and defrosting (defogging) mode.

除霜（除雾）模式。

Defrosting (defogging) mode.

当进入除霜（除雾）模式时，吹风角度切换到除霜模式，当再次操作除霜按键，或者操作吹风模式按键、AUTO 按键，强制制冷或制热按键时，恢复之前的吹风角度。

When entering the defrosting (defogging) mode, the blowing angle switches to the defrosting mode. When the defrost button is operated again, or the blowing mode button, AUTO button, forced cooling or heating button are operated, the previous blowing angle will be restored.

5.1.5 风量控制旋钮
5.1.5 Air volume control knob

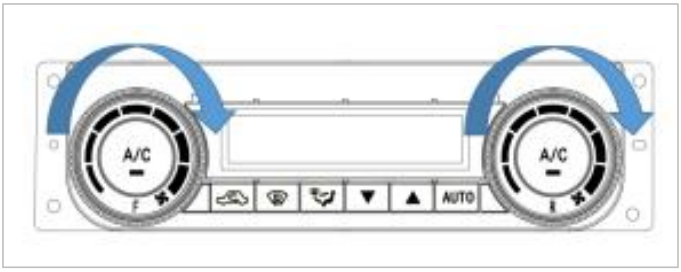

前鼓风机：旋转前鼓风机控制旋钮调节风量，显示屏显示 F00~F27，即为前鼓风机风量档位；

Front blower: Rotate the front blower control knob to adjust the air volume. The display shows F00~F27, which is the air volume gear of the front blower;

后鼓风机：旋转后鼓风机控制旋钮调节风量，显示屏显示 b00~b27，即为后鼓风机风量档位。

Rear blower: Rotate the rear blower control knob to adjust the air volume. The display shows b00~b27, which is the air volume gear of the rear blower.

5.1.6 温度控制按键
5.1.6 Temperature control button

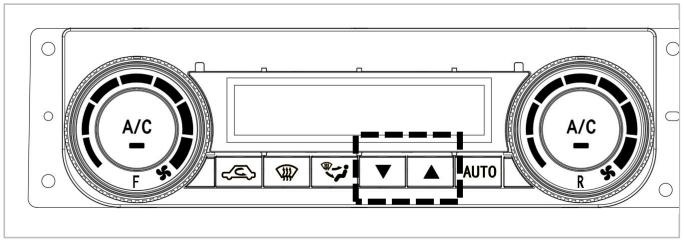

按正三角箭头：温度升高

Press the equilateral triangle arrow: temperature rise

按倒三角箭头：温度降低。

Press the inverted triangle arrow: temperature decreases.

空调系统可设置温度范围：16℃-32℃。

The temperature range of the A/C system can be set: 16°C-32°C.

5.1.7 内/外循环按键
5.1.7 Internal/external circulation button

开启空调面板后，系统默认内循环，即显示屏显示 图标，再次按下内/外循环控制按键后该图标消失进入外循环模式。如果快速使车厢升温或者快速制冷，可使用内循环模式；

After turning on the air conditioning panel, the system defaults to internal circulation, that is, the screen displays icon. After pressing the internal/external circulation control button again, the icon disappears and enters the external circulation mode. If the compartment is heated up or cooled quickly, the internal circulation mode can be used;

1、 如果快速使车厢升温或者快速制冷，可使用内循环模式；

1. If the compartment is heated up or cooled quickly, the internal circulation mode can be used;

2、 在除霜（除雾）模式下，默认内循环，可操作内/外循环控制按键切换内外循环；

2. In the defrosting (defogging) mode, the default is internal circulation. The internal/external circulation control button can be operated to switch between internal and external circulation;

3、 在强制制冷或强制制热模式下，默认内循环，可操作内/外循环控制按键切换内外循环；

3. In forced cooling or forced heating mode, the default is internal circulation. The internal/external circulation control button can be operated to switch between internal and external circulation;

4、 在自动模式（即按下 AUTO 按键）下：

4. In automatic mode (i.e. press the AUTO button):

A、制冷模式：默认内循环。

A. Cooling mode: internal circulation by default.

1、 回风传感器故障时，内循环

1.Internal circulation in case of return air sensor fault

2、 回风传感器正常时，▵t>4 度，内循环；▵t<3 度，外循环

2.When the return air sensor is normal, △t>4 degrees, internal circulation; △t<3 degrees, external circulation

如果处于内循环，则每间隔 15 分钟，打开 1 分钟外循环。

If it is in internal circulation, turn on the external circulation for 1 minute every 15 minutes.

B:制热模式：默认外循环。

B: Heating mode: external circulation by default.

16 分钟后，打开内循环，之后每间隔 15 分钟，打开 1 分钟外循环。

After 16 minutes, turn on the internal circulation, and then turn on the external circulation for 1 minute every 15 minutes.

5.1.8 除霜（除雾）模式
5.1.8 Defrosting (defogging) mode

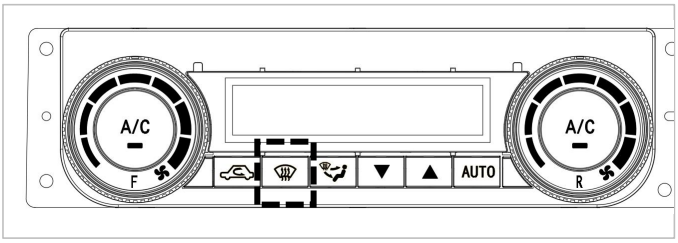

按下除霜（除雾）模式按键，风量全部从前风窗出风口吹出,根据需要调整风量大小。

Press the defrosting (defogging) mode button, and all air volume will be blown out from the front windshield outlet. Adjust the air volume as needed.

5.1.9 系统制冷操作（手动）
5.1.9 System refrigeration operation (manual)

操作前后鼓风机旋钮开启空调面板，并设置温度，按下前后 A/C 按键，此时按键指示灯亮起，制冷系统开始工作，并根据需要设置吹风模式，吹风口风量根据需要调整旋钮档位。

Operate the front and rear blower knobs to turn on the A/C panel and set the temperature. Press the front and rear A/C buttons. At this time, the button indicator will light up and the refrigeration system will start working. Set the blowing mode as needed and adjust the knob gear for the air volume at the outlet as needed.

如炎热天气下，或车辆长时间停留在阳光直接照射的地方时，可使用最大制冷模式（温度设置 16℃、前后鼓风机风量调至最大、吹面模式），并短暂开启车窗，以便迅速将热空气释放出去。

In hot weather, or when the vehicle stays in a place with direct sunlight for a long time, you can use the maximum cooling mode (temperature setting 16°C, front and rear blower air volume adjusted to maximum, air-to-face mode), and open the window briefly to quickly release the hot air.

根据需要可同时开启前后 A/C 开关或单独开启其中一个。

The front and rear A/C switches can be turned on at the same time or one of them separately as needed.

夏季开启制冷时建议温度设置范围：20-22℃。

The recommended temperature setting range when cooling is turned on in summer: 20-22°C.

在除霜（除雾）模式下，设定温度<=24 度：可操作 AC 按键开关压缩机；设定温度>=25 度：操作 AC 按键无效。

In the defrosting (defogging) mode, if the set temperature is less than or equal to 24°C: the AC button can be operated to switch on and off the compressor; if the set temperature is greater than or equal to 25°C: operating the AC button is invalid.

5.1.10 系统制热操作（手动）
5.1.10 System heating operation (manual)

操作前后鼓风机旋钮开启空调面板，并设置温度，制热系统开始工作，并根据需要设置吹风模式，吹风口风量根据需要调整旋钮档位。

Operate the front and rear blower knobs to turn on the A/C panel, set the temperature, start the heating system, set the blowing mode as required, and adjust the knob gear for air volume at the outlet as required.

暖风/除霜是通过电加热器 ptc 加热车内空气使车内温度升高。

Heating/defrosting is to heat the air in the vehicle through the electric heater PTC to increase the temperature inside the vehicle.

冬季开启制热时建议温度设置范围：25-28℃。

The recommended temperature setting range when

heating is turned on in winter: 25-28°C.

5.1.11 AUTO 模式
5.1.11 AUTO mode

开启空调面板后，按下 AUTO 功能按键，显示器“AUTO”图标亮起，系统进入自动控制模式。

After turning on the A/C panel, press the AUTO function button, the "AUTO" icon on the display lights up, and the system enters the automatic control mode.

1、 通过设置温度，系统开启制冷/制热模式；

1. By setting the temperature, the system starts cooling/heating mode;

2、 进入自动模式后风速将根据车内温度与设定温度的差值自动控制风量大小；

2. After entering the automatic mode, the wind speed will automatically control the air volume according to the difference between the temperature inside the vehicle and the set temperature;

3、 在自动模式时若按下“AUTO”或手动调整风量控制旋钮，系统将退出自动模式；

3. In automatic mode, if you press "AUTO" or manually adjust the air volume control knob, the system will exit the automatic mode;

5.1.12 强制制冷/制热功能
5.1.12 Forced cooling/heating function

前空调强制制冷按键：长按左侧 AC 按键 5 秒进入，显示 Frc；

Front A/C forced cooling button: Press and hold the left AC button for 5s to enter, displaying Frc;

后空调强制制冷按键：长按右侧 AC 按键 5 秒进入，显示 brc；

Rear A/C forced cooling button: Press and hold the right AC button for 5s to enter, displaying brc;

前空调强制制热按键：长按前除霜按键 5 秒进入，显示 FrH；

Front A/C forced heating button: Press and hold the front defrost button for 5s to enter, displaying FrH;

后空调强制制热按键：长按吹风模式按键 5 秒进入，显示 brH。

Rear A/C forced heating button: Press and hold the blowing mode button for 5s to enter, displaying brH.

强制模式工作时间 5 分钟，5 分钟后自动退出。

The forced mode works for 5 minutes and automatically exits after 5 minutes.

5.1.13 空调操作建议
5.1.13 Suggestions on A/C operation

提醒：如果 1 个月以上不用空调，应打开系统 10 分钟以上（每月一次，包括冬季）。这是为了保持压缩机和密封件适当润滑，以延长系统的使用寿命。

Note: If the A/C is not used for more than 1 month, turn on the system for more than 10 minutes (once a month, including winter). This is to keep the compressor and seals properly lubricated to extend the service life of the system.

提醒：使用空调时，蒸发器上会形成冷凝物。因此，当车辆停止后，你会在车底看到一小摊水。

Note: Condensate forms on the evaporator when the A/C is used. Therefore, when the vehicle stops, you will see a small pool of water underneath.

5.2 多媒体
5.2 Multimedia

5.2.1 电视
5.2.1 TV

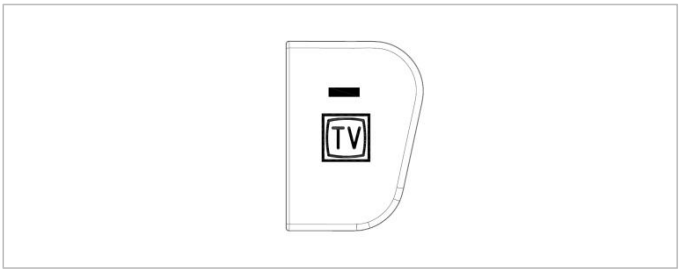

此开关控制车内电视电源，按下即可将电视电源打开，再按下即可关闭。按下此开关，开关上的“TV 指示灯（绿色）”点亮，以表示车内电视电源打开，再次按下开关以关闭车内电视，指示灯熄灭。

This switch controls the power supply of the TV in the car. Press it to turn on the TV, and press it again to turn it off. Press this switch, and the "TV indicator (green)" on the switch will light up to indicate that the power of the TV in the car is turned on. Press the switch again to turn off the TV in the car, and the indicator will go out.

5.2.2 MP5

5.2.2.1 基本功能
5.2.2.1 Basic functions

MP5 系统集成多媒体播放、蓝牙连接、语音控制等功能，支持视频/音频播放、手机互联及智能语音操作。设备通过中控台触屏操作，配备以下接口：USB 接口、电源接口、RCA 音频输入、GPS 天线接口。

The MP5 system integrates multimedia playback, Bluetooth connection, voice control and other functions,

supporting video/audio playback, mobile phone interconnection and intelligent voice operation. The equipment is operated through the touch screen of the center console and is equipped with the following interfaces: USB interface, power interface, RCA audio input, GPS antenna interface.

5.2.2.2 主屏幕布局

5.2.2.2 Home screen layout

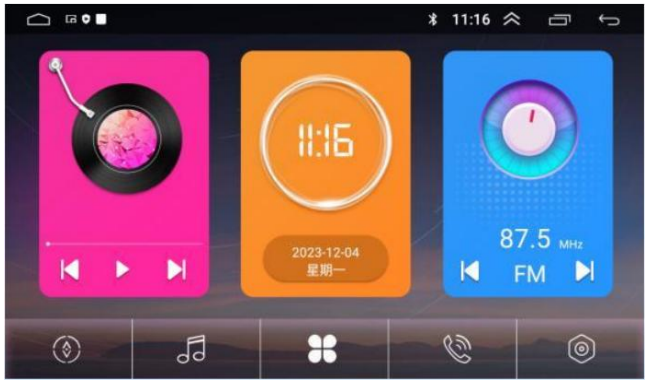

顶部状态栏包含：

The top status bar contains:

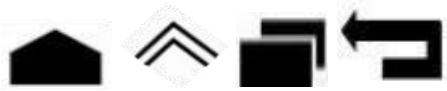

1. 主界面键 2.隐藏键 3.后台管理 4.返回键

1. Main interface key 2. Hide key 3. Backstage management 4. Return key

底部功能键包含：

The function keys at the bottom include:



导航 音乐 二级菜单 通话 设置

Navigation Music Secondary Menu Call Settings

触摸设计：可设置电源、主界面、返回、音量+、音量-、上一曲、下一曲、导航等触摸按键。

Touch design: touch buttons such as power, main interface, return, volume +, volume -, previous song, next song and navigation can be set.

5.2.2.3 下拉栏

5.2.2.3 Drop-down bar

轻触屏幕向下拖动弹出下拉菜单，向上拖动隐藏。

Touch the screen and drag it down to pop up a drop-down menu, drag it up to hide it.

1. WiFi，点击打开/关闭，长按进入 WiFi 操作界面

1. WiFi: tap it to turn on/off, and long press it to enter the WiFi operation interface

2. 蓝牙，点击可打开/关闭，长按进入蓝牙操作界面

2. Bluetooth: Tap it to turn on/off, and press and hold it to enter the Bluetooth operation interface

3. 屏幕开关，点击可关闭屏幕

3. Screen switch, click to turn off the screen

4. 原车功放，点击可打开/关闭

4. Original vehicle power amplifier, click to turn on/off

5. 截屏，图片保存到文件管理器中

5. Take a screenshot and save the picture to the file manager

6. 车载设置，点击进入车载设置

6. On-board settings, click to enter the on-board settings

7. 一键清理，点击可清除设备垃圾

7. One-click cleaning, click to remove device garbage

8. 视频输出： 点击进入视频输出界面

8. Video output: Click to enter the video output interface

9. 光纤输出，点击可打开/关闭

9. Optical fiber output, click to turn on/off

5.2.2.4 本地音乐

5.2.2.4 Local music

点击 "本地音乐"进入操作界面。（当设备具有相应媒体文件时，本操作有效）

Tap "local music" to enter the operation interface. (This operation is valid when the device has corresponding media files)

按键操作说明：

Button operation instructions:

U 盘音频如何播放：

How to play USB audio:

1、 车机 USB 接口插入 U 盘后，U 盘音乐可在本地音乐直接播放。

1. After the USB interface of the IVI is inserted into the USB flash disk, the USB flash disk music can be played directly in the local music.

2、 打开【文件管理器】---选中文件点击【复制】

---切换到【内置存储】---点击【粘贴】

2. Open [File Manager] - Select the file and click [Copy] - Switch to [Built-in Storage] - Click [Paste]

5.2.2.5 收音机

5.2.2.5 Radio

点击“收音机”进入操作界面

Tap "radio" to enter the operation interface

• FM/AM 波段可各储存 40 个有效平台

• FM/AM bands can store 40 effective platforms each

按键操作说明：

Button operation instructions:

 返回主界面

 Return to the main interface

 返回上一步

 Return to the previous step

 音效设置

 Sound effect settings

 向上搜索

 Search up

 向下搜索

 Search down

 上一个电台

 Last radio station

 下一个电台

 Next radio station

1、 远/近程：

1. Long/short range:

远程：设备灵敏度好，能接收到信号较弱的电台。

Long range: The equipment has good sensitivity and can receive radio stations with weak signals.

近程：设备灵敏度差，适于听信号强的电台。

Short range: The equipment has poor sensitivity and is suitable for listening to radio stations with strong signals.

2、 自动搜索：

2. Automatic search:

点击【自动搜索】，执行自动搜索功能，并自动保存搜索到的电台。

Click [Automatic Search] to perform the automatic search function and automatically save the searched radio stations.

3、 FM/AM：

3. FM/AM:

FM: 64.0MHz-108.0MHz

AM: 522KHz-1629KHz

4、 简写含义：

4. Abbreviation meaning:

ST：FM 收音时立体声开关

ST: Stereo switch during FM radio reception

TA：自动搜索当前电台的其他的发射频率

TA: Automatically search for other transmitting frequencies of the current radio station

AF：自动搜索同类型节目的电台

AF: Automatically search for radio stations of the same type of programs

PTY：程序类型显示和搜寻

PTY: Program type display and search

TP：强制性交通信息

TP: Mandatory traffic information

6、 驾驶车辆

6. Driving the vehicle

6.1 点火开关

6.1 Ignition switch

点火开关位置和功能

Ignition switch position and function

将钥匙拔出后，转向锁被激活，从而防止转向盘旋转。

After the key is pulled out, the steering lock is activated to prevent the steering wheel from rotating.

为了将钥匙从点火开关中拔出，先将其逆时针旋转至“ACC（解锁）”位置。然后将钥匙朝点火开关压下并继续逆时针旋转至“LOCK（上锁）”位置。此时即可拔出钥匙。

To remove the key from the ignition switch, turn it counterclockwise to the "ACC (unlocked)" position. Then press the key towards the ignition switch and continue turning it counterclockwise to "LOCK (locked)" position. At this time, pull out the key.

车辆运行时，切勿将钥匙拔出。否则您将无法控制车辆的方向。

Do not pull out the key when the vehicle is running. Otherwise, you will be unable to control the direction of the vehicle.

将点火开关关闭后，务必将钥匙拔出，尤其是如果将儿童单独留在车内时，更应如此。切勿将点火开关关闭以进行惯性滑行，因为在此种情况下无法获得制动助力器和动力转向装置的协助。

Be sure to pull out the key after turning off the ignition switch, especially if a child is left alone in the vehicle. Never turn off the ignition switch for coasting, as you cannot obtain assistance from the brake booster and power steering device in this case.

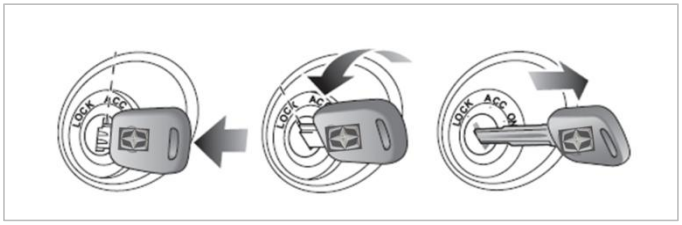

点火开关挡位

Ignition switch position

LOCK（上锁）：点火开关关闭。在此位置仅可以插入或拔出钥匙。将钥匙从“LOCK（上锁）”位置拔出后，点火开关将锁止转向管柱，以防止转向盘转动。

LOCK (locked): The ignition switch is turned off. The key can only be inserted or pulled out at this position. When the key is pulled out of the "LOCK (locked)" position, the ignition switch locks the steering column to prevent rotation of the steering wheel.

ACC（解锁）：转向管柱解锁，个别电器和附件可以工作，如：收音机。

ACC (unlocked): When the steering column is unlocked, individual electrical appliances and accessories can work, such as radio.

提醒：

Note:

切勿长时间将钥匙留在“ACC（解锁）”位置，以防不必要的电池电量流失。

Do not leave the key in the "ACC (unlocked)" position for a long time to prevent unnecessary battery power loss.

ON（开启）：点火开关开启，所有的仪表、控制装置和电路都可以工作。

ON: When the ignition switch is turned on, all instruments, control devices and circuits can work.

提醒：

Note:

车辆未运行切勿将钥匙留在“ON（开启）”位置。

Never leave the key in the "ON" position when the vehicle is not running.

START（启动）：电动机启动后，应立即松开钥匙，钥匙自动从“START（启动）”位置回到“ON（开启）”位置。

START: After the motor starts, release the key, it will automatically return from the "START" position to the "ON" position.

6.2 启动/停止电动机

6.2 Start/stop motor

启动

Start

- 换挡杆置于空挡。
- Place the shift lever in the neutral gear.
- 点火钥匙转到ON档，系统自检（五秒）。
- Turn the ignition key to the ON position, and the

system will perform a self-test (for five seconds).

- 踩住刹车踏板，点火钥匙转到START档，保持一秒后松开。
- Depress the brake pedal, turn the ignition key to the START position, and hold it for one second before releasing it.
- 仪表内“READY”变为绿色，车辆启动成功。
- If "READY" in the instrument turns green, the vehicle is started successfully.
- 确保所有车门关闭，踩住刹车踏板，挂入前进 (D) 档或倒档（R）。
- Make sure that all doors are closed, depress the brake pedal, and shift to drive gear (D) or reversing gear (R).
- 松开手刹、刹车踏板，踩加速踏板起步。

Release the handbrake and brake pedal, and depress the accelerator pedal to start moving.

停止

Stop

将点火开关从“ON（打开）”位置打到“ACC（解锁）”位置，以停止电动机。

Turn the ignition switch from "ON" to "ACC (unlocked)" to stop the motor.

电动车节电驾驶方法

Energy-saving driving methods for electric vehicles

1、“缓起步”。起步时轻踩加速器，让电动车缓慢起动，禁止猛踩加速器。

1. "Start slow". When starting, depress the accelerator gently to start the electric vehicle slowly. Do not depress the accelerator violently.

2、“多滑行”。遇下坡时应松开加速器，随车的惯性自己滑行，禁止关闭钥匙和空挡滑行。

2. "Coast more". In the case of downhill, release the accelerator, allowing the vehicle's inertia to keep it moving forward. It is prohibited to turn off the ignition or shift into neutral gear for coasting.

3、“少刹车”。观察路面交通请况，必要刹车时提前减速，不抢道行驶，非紧急情况禁止急刹（急刹指一次性使电动车停止工作）。

3. "Brake less". Observe the traffic conditions on the road. If necessary, start slowing down in advance when braking. Avoid cutting in abruptly. Refrain from emergency braking (bringing the electric vehicle to a complete stop in a single short time) unless it's an emergency situation.

4、“及充电”。使用完毕及时充电，有条件的情况停车就充电，保持蓄电池内储存75%以上的电量。

4. "Charge in time". Charge the battery in time after use. If conditions permit, it is recommended to charge the vehicle whenever it is parked, in order to keep the remaining battery capacity above 75%.

5、“选直行”。行驶中尽量直行，缓转弯，减少蛇形。

5. "Go straight". During driving, try to go straight, turn slowly, and avoid S-shaped running.

6、“不超载”。按车辆规定的载人数和载重量，可适当偏低人数和载重，避免车辆负重行驶。

6. "No overload". According to the specified passenger capacity and load capacity of the vehicle, the number of passengers and load can be appropriately lowered to avoid driving with heavy loads.

6.3 换挡旋钮

6.3 Gearshift knob

挡位显示在仪表上：

The gear is displayed on the instrument:

R 挡是倒车挡，在汽车停稳后方可使用；

R gear is the reverse gear and can only be used after the vehicle stops;

N 挡是空挡，当需要暂时停车时使用；

N gear is neutral gear and is used when temporary parking is required;

D 挡是行车挡，供正常行驶时使用。

D gear is the driving gear for normal driving.

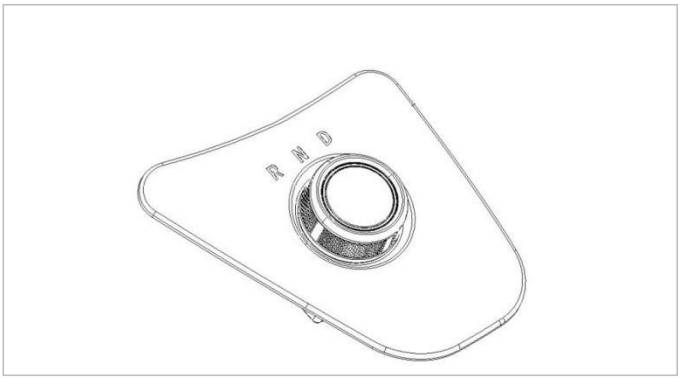

（1） 换挡旋钮

(1) Gearshift knob

注意：

Caution:

在使用操纵手柄选挡时，不要踩下加速踏板，挂上挡位后也不要立即猛踩加速踏板。当车辆在前进状态中，绝不可将挡位拨到倒挡位置，以免损坏零件，在进行换入倒挡前，需确认车辆在完全停止状态。车辆有怠速，请在挂上 D 挡或 R 挡时，缓慢松开制动踏板，以便稳定控制车速。

When using the joystick to select gears, do not step on the accelerator pedal, and do not immediately step on the accelerator pedal after engaging a gear. When the vehicle is moving forward, never shift to reverse gear to avoid damaging parts. Before shifting into reverse gear, make sure that the vehicle is completely stopped. The vehicle will idle. Please release the brake pedal slowly when shifting into D (Drive) or R (Reverse) to maintain stable speed control.

6.4 电动液压助力转向系统

6.4 Electric hydraulic power steering system

本车的转向采用了电动液压助力转向系统。当启动开关转到START挡时，EHPS 系统启动。

Electric hydraulic power steering system is adopted for this vehicle. When the Start switch is turned to START position, the EHPS system starts.

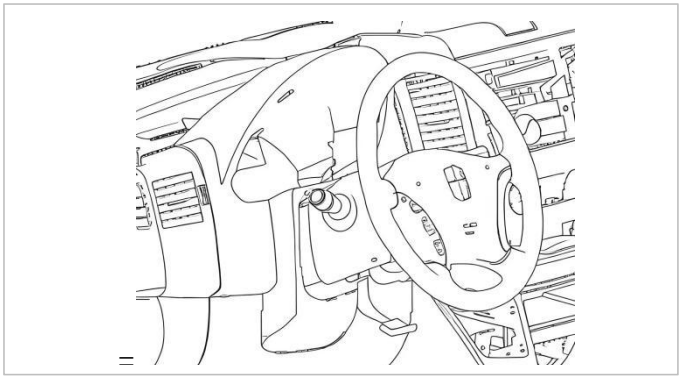

在以下情况中，可能感觉方向盘很难转动，但是电动转向系统警告灯没有点亮,此现象为非故障模式，具体为:

In the following cases, it may be difficult to rotate the steering wheel, but the electric steering system warning light does not light up. This phenomenon is a non-fault mode, specifically:

- 长时间频繁操纵或转动方向盘时。
- When the steering wheel is frequently operated or turned for a long time.
- 长时间转动方向盘时，电动机会产生过热现象，为保护电动机机械装置，ECU 内部会设置过热保护，助力效果就会减小或者取消。此时要停止转动方向盘，或停车并将点火开关设置在 ACC挡或OFF挡。10分钟后系统将冷却，恢复助力。
- When the steering wheel is turned for a long time, the motor will be overheated. In order to protect the mechanical device of the motor, overheating protection will be set inside ECU, and the power assistance effect will be reduced or cancelled. At this time, stop turning the steering wheel or park the vehicle and turn the ignition switch to ACC or OFF position. After 10 minutes, the system will cool down and resume power assistance.
- 当蓄电池亏电时方向盘也很难转动。
- It is also difficult to turn the steering wheel when the battery is discharged.

蓄电池亏电时，EHPS的ECU最低工作电压需求为9V，当蓄电池严重亏电，达不到ECU工作电压需求的时候，就不会有助力产生。此时应检查蓄电池状况，如有必要，则给蓄电池重新充电或更换蓄电池。

When the battery is discharged, the minimum working voltage requirement of the EHPS ECU is 9V. When the battery is seriously discharged and cannot meet the ECU working voltage requirement, no power will be generated. At this time, check the battery, and recharge or replace it if necessary.

6.5 制动系统

6.5 Brake system

6.5.1 防抱死制动系统（ABS）

6.5.1 Anti-lock braking system (ABS)

防抱死制动系统（ABS）控制制动压力，使车轮制动时不会抱死，从而保持车辆的可操纵性。无论在哪种路况下，当车速高于10公里/小时，防抱死制动系统（ABS）便开始工作。在易滑路面行驶时，即使微微制动，防抱死制动系统（ABS）也会进行干预。

The ABS controls the brake pressure so that the wheels will not lock during braking, thus maintaining the maneuverability of the vehicle. Regardless of the road conditions, when the vehicle speed is higher than 10 kilometers per hour, the ABS starts to work. On a slippery road, the ABS will intervene even if there is slight braking.

事故风险

Accident risk

不得反复踩踏制动踏板（点刹）。要均匀有力地踩下制动踏板。点刹会降低制动效果。

Do not depress the brake pedal repeatedly (inching brake). Press the brake pedal evenly and firmly. Inching brake will reduce the braking effect.

当车辆运行时，如果指示灯 常亮，表明有故障。尽管如此，正常的驾驶和制动功能仍有效，建议及时前往特约维修站进行保养维修。

When the vehicle is running, if the indicator stays on, it indicates a fault. However, the normal driving and braking functions are still effective. It is recommended to go to an authorized service station for maintenance in time.

如果防抱死制动系统 (ABS) 在制动过程中进行干预，可以感觉到踏板脉动般地振动。

If the ABS intervenes during braking, the pedal will produce pulsating vibration.

如果防抱死制动系统（ABS）启用：

If the ABS is activated:

- *继续踩牢制动踏板，直到制动情况结束。*
- *Continue to depress the brake pedal firmly until the braking situation ends.*

对于紧急制动：

For emergency braking:

- *全力踩下制动踏板。*
- *Fully press the brake pedal.*

事故风险

Accident risk

您应该不断调整驾驶方式以适应当前的路况和天气条件，并与其他道路使用者和路面上的物体保持足够的距离。如果防抱死制动系统（ABS）有故障，制动时车轮可能会抱死。从而使制动时车辆的可操控性受到限制，这可能会使制动距离拉长。

You should constantly adjust the driving mode to adapt to current road conditions and weather conditions, and keep a sufficient distance from other road users and objects on the road surface. If the ABS fails, the wheels may be locked during braking. As a result, the maneuverability of the vehicle is limited during braking, which may lengthen the braking distance.

6.5.2 汽车电子稳定性系统（ESC）
6.5.2 Electronic stability control (ESC) system

汽车电子稳定性控制系统 (ESC) 通过电子控制单元监测车辆行驶稳定性和牵引力，即轮胎和路面之间的动力传输。

The ESC system monitors the driving stability and traction, i.e. power transmission between tires and road surface, of the vehicle through an electronic control unit.

如果探测到车辆偏离预期行驶方向，将会对一个或多个车轮进行制动以稳定车辆。此外还会改变动力系统输出功率，以保证车辆在物理极限范围内沿预期路线行驶。

If it is detected that the vehicle deviates from the expected driving direction, one or more wheels will be braked to stabilize the vehicle. In addition, the power system output will be changed to ensure that the vehicle travels along the expected route within physical limits.

能够帮助驾驶员在湿滑路面上起步。此外，还可以在制动时稳定车辆。

It can help the driver start on a slippery road. In addition, it can stabilize the vehicle during braking.

事故风险

Accident risk

如果汽车电子稳定性控制系统（ESC）介入：

If the ESC system intervenes:

任何情况下都不要停用汽车电子稳定性控制系统（ESC）。

Do not deactivate the ESC system under any circumstances.

起步时，仅踩下油门踏板到必要程度。

When starting, only depress the accelerator pedal to a necessary extent.

根据当前的路况和天气情况调整驾驶方式。

Adjust the driving mode according to current road conditions and weather conditions.

1、只允许使用符合推荐尺寸的轮胎。

⚠ *1. Only tires that meet the recommended dimensions are allowed to be used.*

2、 车轮滑转可产生切割作用，从而使车辆在松散路面上获得更佳的牵引力。在很厚的积雪路面、沙地或砂砾路面上行驶时，最好停用汽车电子稳定性控制系统（ESC）.

2. Wheel slip can produce a cutting effect, allowing the vehicle to obtain better traction on loose roads. It is recommended to deactivate the ESC system when the vehicle runs on thick snow, sand or gravel roads.

3、 除转毂工况外的所有工况，当车速高于60公里/小时，汽车电子稳定性控制系统（ESC）将自动开启。

3. Under all working conditions except the rotating hub condition, when the vehicle speed is higher than 60 km/h, the ESC system will be automatically turned on.

ESC OFF 开关
ESC OFF switch

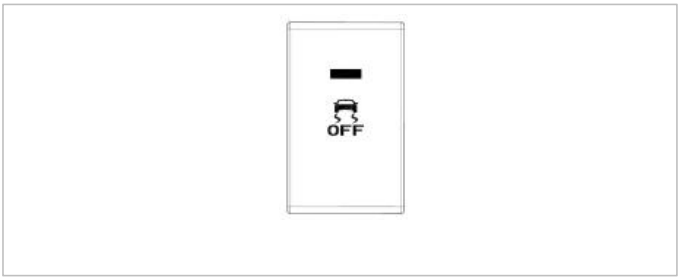

此开关控制汽车车身稳定系统，按下此开关，开关上的“ESC OFF 指示灯（绿色）”点亮，以表示车身稳定系统关闭，再次按下开关以打开车身稳定系统，指示灯熄灭。

This switch controls the ESC system. Press this switch, and the "ESC OFF indicator lamp (green)" on the switch will illuminate to indicate that ESC is turned off. Press this switch again to turn on the ESC system, and the indicator lamp will go out.

6.5.3 电子制动力分配（EBD）
6.5.3 Electronic brakeforce distribution (EBD)

电子制动力分配（EBD）对后轮的制动压力进行监控，以改进制动时的行驶稳定性。

EBD monitors the brake pressure of the rear wheels to improve driving stability during braking.

⚠ *电子制动力分配（EBD）仅在车辆向前行驶时有效。*

⚠ *EBD is only effective when the vehicle is running forward.*

6.5.4 液压辅助制动系统（HBA）
6.5.4 Hydraulic brake assist (HBA)

液压辅助制动系统（HBA）在紧急制动情况下启动。如果您快速踩下制动踏板，液压辅助制动系统识别出驾驶员紧急制动意图，会自动增加制动力，从而缩短制动反应时间及制动距离。

The HBA system is activated in the event of emergency braking. If you quickly step on the brake pedal, the hydraulic auxiliary braking system will recognize the driver's emergency braking intention and automatically increase the braking force, thereby shortening the braking reaction time and braking distance.

⚠ *驾驶员一旦松开制动踏板，制动器将恢复正常工作状态，液压辅助制动系统（HBA）停用。*

⚠ *Once the driver releases the brake pedal, the brake will return to normal working condition and the HBA system will be deactivated.*

6.5.5 坡道起步辅助功能（HHC）
6.5.5 Hill hold control (HHC)

坡道起步辅助功能（HHC）在车辆上坡或者倒坡起步情况下启动。驾驶员松开制动踏板后，瞬间保持一定的制动压力，防止车辆溜坡，从而帮助驾驶员顺利完成起步。

The HHC is activated when the vehicle starts uphill or downhill. After the driver releases the brake pedal, a certain braking pressure is maintained instantly to prevent the vehicle from sliding down the slope, thereby helping the driver to start smoothly.

⚠ *仅适当保持驾驶员所施加的制动压力，并不会进行主动增压，持续时间约 3 秒。*

⚠ *Only the brake pressure applied by the driver is properly maintained, and active pressurization will not be performed for about 3 seconds.*

6.5.6 行车制动
6.5.6 Service brake

⚠ *为避免剧烈制动，应平稳的操纵制动踏板，当驶下斜坡时应一面用发动机制动，一面经常使用脚踏制动。如果行车中发动机停止运转，制动助力器就不能充分发挥其作用，从而制动效果也会降低。在这种情况下，用力踩下制动踏板才能达到制动效果。*

To avoid violent braking, operate the brake pedal smoothly. When driving down a slope, use the engine for braking and frequently use the foot brake at the same time. If the engine stops running during driving, the brake booster cannot fully function, reducing the braking performance. In this case, the braking effect can only be achieved by pressing the brake pedal hard.

按如下所示检查并调整制动踏板空行程和高度：

Check and adjust the idle stroke and height of brake pedal as shown below:

- 先调整制动踏板高度到设计高度，再调整真空助力器推杆和踏板间的自由间隙。
- Adjust the height of brake pedal to the design height, and then adjust the free clearance between the vacuum booster push rod and the pedal.
- 旋转安装在制动踏板上方的制动开关直到制动踏板中心距下方地板垫高度140mm～145mm为止，然后将锁止螺母旋紧。
- Rotate the brake switch installed above the brake pedal until the center of the brake pedal is 140 mm ~ 145 mm away from the floor mat below, and then tighten the lock nut.
- 使用推杆锁止螺母进行调整：旋转推杆直至自由间隙达到1.5mm～2.5mm要求，将锁止螺母旋紧锁止推杆传力叉。
- Use the push rod lock nut for adjustment: rotate the push rod until the free clearance reaches 1.5 mm ~ 2.5 mm, and tighten the lock nut to lock the push rod force transmission fork.

6.5.8 紧急制动
6.5.8 Emergency brake

在正常情况下，只允许在车辆静止时拉起手制动器。在特殊情况下，如果行车制动器出现故障，可以使用手制动器进行紧急制动。

Under normal circumstances, it is only allowed to pull up the hand brake when the vehicle is stationary. In special cases, if the service brake fails, the hand brake can be used for emergency braking.

事故风险

Accident risk

如果手制动器拉杆拉得过急，后轮可能抱死。车辆可能会打滑。一定要小心地拉起手制动器，确保制动作用适度。

If the hand brake pull rod is pulled too fast, the rear wheels may be locked. The vehicle may slip. Be sure to carefully pull up the hand brake to ensure that it works properly.

6.5.9 EPB（电子驻车制动）
6.5.9 Electric parking brake (EPB)

适用于配置EPB（电子驻车制动）的车型。

Applicable to models equipped with EPB.

EPB(电子驻车制动)开关 Ⓟ 位于仪表台右侧，使用EPB开关控制驻车制动器的拉紧或释放。

The EPB switch Ⓟ is located on the right side of the dashboard, and it can be used to control the tension or release of the parking brake.

EPB 使用前需知事项

Precautions for use of EPB

- 点火开关处于ON挡，EPB可一直使用。为防止蓄电池过分放电，当车辆不运行时，避免重复操作EPB开关。在蓄电池电量不足的情况下，EPB系统是不能够拉紧或释放的。
- When the ignition switch is in the ON position, EPB can always be used. To prevent overdischarge of the battery, do not operate the EPB switch repeatedly when the vehicle is not running. The EPB system cannot be tensioned or released when the battery is low.
- 在坡道起步时，EPB可防止无意间发生车辆溜车。当车辆牵引力大于下滑分力时，EPB才会自动释放。
- For starting on a hill, EPB can prevent the vehicle from sliding unintentionally. The EPB will be released automatically only when the vehicle traction force is greater than the sliding component.
- 在车辆的普通制动操作失灵时，紧急制动功能仍能对车辆进行制动，具体请参阅本章节中的“紧急制动功能”。
- When the general braking operation of the vehicle fails, the emergency braking function can still brake the vehicle. Please refer to "Emergency Braking Function" in this chapter for details.
- 在接通或关闭电子驻车制动时会产生轻微的噪音，此是正常现象，不必因此而不安。
- Slight noise will be generated when the EPB is turned on or off, which is a normal phenomenon, so there

is no need to worry about it.

- 当车辆电源中断时，驻车制动器拉紧状态下无法再松开，松开状态下无法再拉紧，请外接电源。
- When the vehicle power supply is interrupted, the parking brake cannot be released when it is tensioned and cannot be tightened when it is released. Please connect an external power supply.
- 如果“EPB（电子驻车制动）指示灯（红色）” Ⓟ 未能在您操作EPB开关时熄灭或亮起，或者“EPB（电子驻车制动）故障警告灯（黄色）” EPB 亮起，EPB用正常的操作无法释放，请与本公司授权服务商联系。
- If the "EPB indicator (red)" Ⓟ fails to go out or illuminate when you operate the EPB switch, or if the "EPB fault warning light (yellow)" EPB is on and the EPB cannot be released with normal operation, please contact our authorized service provider.
- 不要在坡度大于20%的路面上电子驻车，否则可能溜车。当在超过限定坡度的坡道停车时，EPB不能完全制动，此时驾驶员可通过踩下制动踏板来防止溜车。
- Do not park the vehicle on a road with a gradient greater than 20%; otherwise, it may slide. When the vehicle is parked on a slope exceeding the limited gradient, EPB cannot be used for full braking. At this time, the driver can depress the brake pedal to prevent sliding.
- **驻车**
- **Parking**

⚠ *仅支持手动驻车功能。*

⚠ *Only manual parking function is supported.*

1. *点火开关处于 ON 挡。*
1. *Turn the ignition switch to the ON position.*
2. *使车辆处于静止状态。*
2. *Keep the vehicle stationary.*
3. *向上拉起 EPB 开关Ⓟ，驻车制动器拉紧，当组合仪表上的“EPB（电子驻车制动）指示灯（红色）” Ⓟ 点亮，表示驻车制动成功。*
3. *Pull up the EPB switch Ⓟ to tighten the parking brake. When the "EPB indicator (red)" Ⓟ on the instrument cluster illuminates, it indicates that the parking braking is successful.*

- **起步**
- **Start**

手动释放 EPB

Manually releasing the EPB

1. 点火开关处于 ON 挡。
1. Turn the ignition switch to the ON position.
2. 踩下制动踏板。
2. Press the brake pedal.
3. 按下 EPB 开关Ⓟ，驻车制动器释放，当组合仪表上的“EPB（电子驻车制动）指示灯（红色）” Ⓟ 熄灭，表示驻车制动松开。
3. Press the EPB switch Ⓟ to release the parking brake. When the "EPB indicator (red)" Ⓟ on the instrument cluster goes out, it indicates that the parking brake is released.

自动释放 EPB

Automatically releasing the EPB

⚠ *当车辆停下且仍处于前进档或倒档位置时，那么绝不允许随意踩加速踏板。否则车辆会立即自行移动，有发生事故的风险。*

⚠ *When the vehicle stops and is still in drive or reverse gear, never depress the accelerator pedal at will. Otherwise, the vehicle will move by itself immediately and may cause an accident.*

1. 点火开关打开，启动车辆。
1. Turn on the ignition switch to start the vehicle.
2. 车辆处于前进档或倒档位置,驾驶员车门已关闭；驾驶员安全带已系紧。
2. The vehicle is in forward or reverse gear, the driver's door is closed; the driver's seat belt is fastened.
3. 踩下加速踏板。在平面或坡道上起步时，踩下加速踏板，当牵引力大于下滑分力时，驻车制动器会自动松开，组合仪表上的“EPB（电子驻车制动）指示灯（红色）” Ⓟ 将会熄灭，车辆即开始移动。
3. Depress the accelerator pedal. When starting on a flat surface or a slope, press the accelerator pedal. When the traction force exceeds the downhill component of gravity, the parking brake will automatically release, and the "EPB (Electronic Parking Brake) indicator (red)" Ⓟ on the instrument cluster will go out, allowing the vehicle to start moving.

- **紧急制动功能**
- **Emergency braking function**

⚠ *此功能用于普通的制动操作已失灵的情况。*

⚠ *This function is used when the ordinary braking*

operation has failed.

拉起 EPB 开关Ⓟ并保持不动，便会激活紧急制动功能。此时车辆会通过驻车制动器进行刹车减速,且具有防抱死控制。只要一松开 EPB 开关或大力踩加速踏板，紧急制动便会中止。

Pull up the EPB switch Ⓟ and keep it still to activate the emergency braking function. At this time, the vehicle will be braked and decelerated by the parking brake with anti-lock braking control. As soon as the EPB switch is released or the accelerator pedal is depressed hard, emergency brake will be stopped.

- **失效释放**
- **Failure release**

⚠ *此功能用于制动踏板信号失效，无法正常手动释放 EPB 的情况。*

⚠ *This function is used when the brake pedal signal fails and the EPB cannot be released manually normally.*

按下 EPB 开关Ⓟ并保持 2 秒，便会激活失效释放功能。当组合仪表上的“EPB（电子驻车制动）指示灯（红色）” Ⓟ熄灭，表示驻车制动松开。

Press and hold the EPB switch Ⓟ for 2s to activate the failure release function. When the "EPB indicator (red)" Ⓟ on the instrument cluster goes out, it indicates that the parking brake is released.

- **维修释放**
- **Maintenance release**

⚠ *此功能用于制动系统更换维修的情况。*

⚠ *This function is used for replacement and maintenance of the brake system.*

1. 使车辆处于静止状态，EPB 处于释放状态。
1. Keep the vehicle stationary and EPB released.
2. 踩下制动踏板。
2. Press the brake pedal.
3. 按下 EPB 开关Ⓟ并保持 10 秒至 15 秒后松开，3 秒内再次按下 EPB 开关Ⓟ，便会激活维修释放功能。当 EPB 电机持续工作释放后，组合仪表上的“EPB（电子驻车制动）故障警告灯（黄色）” EPB 将会闪烁，表示维修释放成功。
3. Press and hold the EPB switch Ⓟ for 10s to 15s, then release it. Press the EPB switch Ⓟ again within 3s to activate the maintenance release function. When the EPB motor continues to work and is released, the "EPB (Electronic Parking Brake) fault warning light (yellow)" EPB on the instrument cluster will flash, indicating that the maintenance release is successful.

6.5.10 AUTO HOLD（自动驻车）
6.5.10 AUTO HOLD

⚠ *适用于配置 AUTO HOLD（自动驻车）的车型。*

⚠ *Applicable to models equipped with AUTO HOLD.*

AUTO HOLD（自动驻车）开关Ⓐ位于仪表台右侧，使用此开关控制自动驻车系统的打开或关闭。

The AUTO HOLD switch Ⓐ is located on the right side of the dashboard. This switch can be used to turn the automatic hold system on or off.

当车辆经常遇见红绿灯或行驶走走停停时，自动驻车系统为驾驶员提供支持，减轻驾驶疲劳。自动驻车功能使驻车制动器在车辆起步时自动释放，在车辆静止时自动驻车。

When the vehicle often encounters traffic lights or stop-and-go driving, the automatic parking system provides support to the driver and reduces driving fatigue. The automatic parking function enables the parking brake to be automatically released when the vehicle starts and automatically parked when the vehicle is stationary.

打开自动驻车

Turn on AUTO HOLD

打开自动驻车功能需要满足这些条件：驾驶员车门已关闭；驾驶员安全带已系紧；车辆已起动。

These conditions must be met to turn on the AUTO HOLD: the driver's door is closed; the driver's seat belt is fastened; the vehicle has started.

按下 AUTO HOLD（自动驻车）开关Ⓐ，当开关上的“自动驻车指示灯（红色）”点亮时，自动驻车功能打开处于待命状态。

Press the AUTO HOLD switch Ⓐ. When the "automatic parking indicator (red)" on the switch lights up, the automatic parking function is turned on and in standby mode.

车辆踩刹车静止后，当组合仪表上的“AUTO HOLD 指示灯（绿色）”点亮，开关上“自动驻车指示灯（红色）”闪烁时，自动驻车处于工作状态，驾驶员可以松开制动踏板。

After the vehicle is braked to a standstill, when the "AUTO HOLD indicator (green)" on the instrument cluster lights up and the "Automatic Parking indicator (red)" on the switch flashes, the automatic parking is in

working condition and the driver can release the brake pedal.

自动驻车进入工作状态时，首先进行ESC保压驻车，3分钟后如果车辆仍然处于静止状态则ESC请求EPB夹紧驻车，组合仪表上的“AUTO HOLD指示灯（绿色）”熄灭，“EPB（电子驻车制动）指示灯（红色）”Ⓟ点亮。

When the automatic parking enters the working state, first perform ESC pressure-maintaining parking. After 3 minutes, if the vehicle is still stationary, ESC requests EPB to engage. The "AUTO HOLD indicator (green)" on the instrument cluster goes out and the "EPB indicator (red)" Ⓟ lights up.

在自动驻车工作过程中，打开车门或解开安全带将触发 EPB 工作，组合仪表上的“AUTO HOLD 指示灯（绿色）”熄灭，“EPB（电子驻车制动）指示灯（红色）”Ⓟ点亮。开关上的“自动驻车指示灯（红色）”熄灭，自动驻车功能关闭。

During the automatic parking process, opening the door or unfastening the seat belt will trigger the EPB to work, the "AUTO HOLD indicator (green)" on the instrument cluster will go out, and the "EPB indicator (red)" Ⓟ will light up. The "automatic parking indicator (red)" on the switch goes out, the automatic parking function is turned off.

在自动驻车工作过程中，如果像往常一样挂挡踩下加速踏板，那么驻车会自动松开，车辆开始起动，组合仪表上的“AUTO HOLD 指示灯（绿色）”熄灭。开关上的“自动驻车指示灯（红色）”恢复常亮，自动驻车处于待命状态。

During the automatic parking process, if you engage a gear and press the accelerator pedal as usual, the parking brake will automatically release, the vehicle will start, and the "AUTO HOLD indicator (green)" on the instrument cluster goes out. The "automatic parking indicator (red)" on the switch returns to normal, and the automatic parking is in standby mode.

关闭自动驻车

Turn off HOLD

按下 AUTO HOLD（自动驻车）开关Ⓐ，当组合仪表上的“AUTO HOLD 指示灯（绿色）”，开关上的“自动驻车指示灯（红色）” 均熄灭时，自动驻车功能关闭。

Press the AUTO HOLD switch Ⓐ. When the "AUTO HOLD indicator (green)" on the instrument cluster and the "automatic parking indicator (red)" on the switch are off, the automatic hold function is turned off.

⚠ *不要在坡度大于20%的路面上自动驻车，否则可能溜车。*

⚠ *Do not park automatically on a road with a slope greater than 20%, otherwise it may slip.*

⚠ *当组合仪表上的“AUTO HOLD 指示灯（黄色）” 亮起，自动驻车系统故障，请尽快前往本公司授权服务商处进行车辆检查。*

⚠ *When the "AUTO HOLD indicator (yellow)" on the instrument cluster lights up, it means that the automatic parking system is faulty. Please go to our authorized service provider for vehicle inspection as soon as possible.*

6.5.11 机械驻车制动
6.5.11 Mechanical parking brake

⚠ 适用于选配机械驻车制动配置的车型；

⚠ Applicable to models with optional mechanical parking brake configuration;

只有当车辆停止时才能拉起手制动器。

The handbrake can only be pulled up when the vehicle is stopped.

拉起手制动器

Pull up the hand brake

尽力向上将拉杆拉起至最靠上的定位槽。仪表盘中的指示灯Ⓟ PARK亮起。

Try to pull the lever up to its uppermost positioning groove. The indicator Ⓟ PARK on the instrument panel will illuminate.

对于带有折叠式手制动器拉杆的车辆，您可以随后将拉降至止动位。

For vehicles with folding handbrake levers, you can then lower the lever to the stop position.

松开手制动器

Release the handbrake

松开手制动时，必须先将拉杆拉至止动位。

When releasing the handbrake, the lever must be pulled to the stop position first.

轻轻拉起拉杆，并按下释放按钮。将拉杆向下推至止动位。仪表盘中的指示灯Ⓟ PARK熄灭。

Gently pull up the lever and press the release button. Push the lever down to the stop position. The indicator Ⓟ PARK

on the instrument panel will go out.

驻车制动的调整

Adjustment of parking brake

调节驻车制动器间隙，调节手刹摇臂支架螺杆螺母，使驻车操纵手柄行程在 8～10 齿之间。

Adjust the clearance of the parking brake, and adjust the screw nut on the rocker arm bracket of the parking brake lever so that the stroke of the parking brake lever is between 8 and 10 teeth.

紧急制动

Emergency brake

➢ 在正常情况下，只允许在车辆静止时拉起手制动器。在特殊情况下，如果行车制动器出现故障，可以使用手制动器进行紧急制动。

➢ Under normal circumstances, it is only allowed to pull up the hand brake when the vehicle is stationary. In special cases, if the service brake fails, the hand brake can be used for emergency braking.

⚠事故风险

⚠Accident risk

如果手制动器拉杆拉得过急，后轮可能抱死。车辆可能会打滑。一定要小心地拉起手制动器，确保制动作用适度。

If the hand brake pull rod is pulled too fast, the rear wheels may be locked. The vehicle may slip. Be sure to carefully pull up the hand brake to ensure that it works properly.

6.6 车辆轮胎

6.6 Vehicle tires

操作和驾驶安全性

Operation and driving safety

轮胎对于车辆的操作安全性和性能特别重要。因此应定期检查轮胎压力、胎面和轮胎状况，不允许对制动系统或车轮进行改装。

Tires are particularly important for the operational safety and performance of vehicles. Therefore, the pressure, tread surface, and condition of the tires shall be checked regularly. Modification to the brake system or wheels is not allowed.

⚠事故风险

⚠Accident risk

基于安全理由，建议您只使用潍柴 (扬州) 亚星新能源商用车有限公司认可，专门适用于您所驾驶的车辆的轮胎。这些轮胎经过专门改进，与车辆的操纵性、舒适性、耐用性相适应，并且与防抱死制动 (ABS) 控制系统或汽车电子稳定性 (ESC) 控制系统的使用相匹配。如果使用其它轮胎，潍柴 (扬州) 亚星新能源商用车有限公司将不对因此而可能造成的损失承担任何责任。您可以从任何一家潍柴 (扬州) 亚星新能源商用车有限公司特许服务中心获得有关轮胎的信息。如果安装未经潍柴 (扬州) 亚星新能源商用车有限公司测试并认可的轮胎，可能会对操控性、噪音等级、燃油消耗量及磨损等特性产生不利影响。另外，当在负载状态下行驶时，尺寸偏差和载荷下不同轮胎的变形特性将可能造成轮胎与车身和车轴部件发生接触，从而导致轮胎或车辆损坏。首个100 公里建议以中速磨合新轮胎。

For safety reasons, it is recommended that you only use the tires approved by Weichai (Yangzhou) Yaxing New Energy Commercial Vehicle Co., Ltd. and specially suitable for your vehicle. These tires are specially designed and improved to suit the maneuverability, comfort, and durability of the vehicle, and are compatible with the use of the anti-lock braking system (ABS) or electronic stability control (ESC) system. If other tires are used, Weichai (Yangzhou) Yaxing New Energy Commercial Vehicle Co., Ltd. shall not assume any responsibility for the possible losses caused thereby. You can obtain information about tires from any franchised service center of Weichai (Yangzhou) Yaxing New Energy Commercial Vehicle Co., Ltd. The installation of tires that have not been tested and approved by Weichai (Yangzhou) Yaxing New Energy Commercial Vehicle Co., Ltd. may adversely affect the maneuverability, noise level, fuel consumption, wear and other characteristics. In addition, during driving under load, dimensional deviations and deformation characteristics of different tires under load may cause contact between the tire and the body and axle components, resulting in damage to the tire or vehicle. It is recommended to run in new tires at a medium speed for the first 100 km.

事故风险

Accident risk

如果车轮螺母或螺栓松动，可能导致车轮侧倾参数变化，造成车辆跑偏、轮胎磨损异常等问题，极端情况下驾驶员可能会失去对车辆的控制，从而引发事故，对驾驶员自身或他人造成伤害。因此，应该定期（至少每年一次）将车轮螺母或螺栓拧紧到规定的紧固扭矩。

Loose wheel nuts or bolts may cause changes in wheel camber parameters, resulting in vehicle deviation, abnormal tire wear, and other problems. In extreme cases, the driver may lose control of the vehicle, which could lead to accidents and injuries to the driver or others. Therefore, wheel nuts or bolts should be tightened to the specified tightening torque regularly (at least once a year).

轮胎损坏

Tire damage

以下原因可能导致轮胎损坏：

The following reasons may cause tire damage:

1、 驾驶车辆的道路条件

1. Road conditions during driving

2、 轮胎老化

2. Tire aging

3、 磕碰路缘

3. Collision with curb

4、 异物扎入

4. Intrusion of foreign matters

5、 轮胎压力不足或过高

5. Insufficient or excessive tire pressure

6、 天气或环境状况

6. Weather or environmental conditions

7、 接触机油、油脂、燃油等橡胶腐蚀品

7. Contact with rubber-corrosive substances such as engine oil, grease, and fuel

8、 四轮定位参数异常

8. Abnormal four-wheel alignment parameters

事故风险

Accident risk

车辆驶过路缘或带有尖锐边角的物体时都可能损坏轮胎的内部结构，这种损坏无法从外观上看出来。轮胎的内部结构损坏只能在经过一定的时间之后才能探测到，并且可能导致爆胎。

The internal structure of tires may be damaged when the vehicle passes through curbs or objects with sharp corners, and such damage cannot be seen from the appearance. Damage to the internal structure of the tire can only be detected after a certain period of time and may result in the tire bursting.

事故风险

Accident risk

超过规定的轮胎负荷能量指数或允许的最高车速可能会导致轮胎损坏或轮胎故障。此时驾驶员可能会失去对车辆的控制，从而引发事故，对驾驶员自身或他人造成伤害。

Exceeding the specified tire load index or the maximum allowable vehicle speed may cause tire damage or failure. In this case, the driver may lose control of the vehicle, resulting in an accident and injury to himself/herself or others.

因此您车辆的轮胎必须只使用经认可的类型和规格，并且必须遵守规定的轮胎负荷能量指数和车速指引。特别要注意遵守有关国家对于轮胎的认可规定，这些法规可能规定了适合车辆的某些轮胎类型，或者可能禁止使用某些在其它国家允许使用的轮胎类型。

Therefore, only approved types and specifications of tires must be used for your vehicle, and the specified tire load index and speed rating must be observed. Special attention shall be paid to complying with the approval provisions of relevant countries for tires. These provisions may specify certain tire types suitable for vehicles or may prohibit the use of some tire types allowed in other countries.

胎压监测

Tire pressure monitoring

在汽车行驶期间，胎压监测系统可以对车辆胎压内的压力、温度进行监测，对超出设定值及时给予报

警，协助驾驶员实时掌握轮胎的状况，减少因轮胎故障所引发的交通事故，增加车辆驾驶安全性。

During driving, the tire pressure monitoring system can monitor the pressure and temperature inside the tires, promptly give an alarm when the set value is exceeded, assist the driver in understanding the real-time condition of the tires, reduce traffic accidents caused by tire failures, and increase driving safety.

6.7 装载
6.7 Load

根据我国法规，驾驶员和车主有责任确保车辆不超载且不装载易燃易爆等物品，由于超载及装载易燃易爆等危险物品引起的一切后果厂方不承担责任。

According to the laws and regulations of China, drivers and vehicle owners are responsible for ensuring that vehicles are not overloaded or loaded with inflammable and explosive articles. The manufacturer shall not be liable for all consequences caused by overloading and loading of inflammable and explosive articles.

应均匀分布乘客携带的较重的行李物品，轮胎气压需根据行李物品的多少进行调整。

The heavier luggage carried by occupants should be evenly distributed, and the tire pressure should be adjusted according to the amount of luggage.

6.8 整车总电源开关
6.8 Vehicle main power switch

1. 电源总开关位于主驾驶员座椅安装坐盆右侧；

1. The master power switch is located on the right side of the main driver's seat base;

2. 上车时，顺时针旋转红色旋钮 90°至竖直状态，使整车处于上电状态；

2. When getting on the vehicle, turn the red knob 90° clockwise to the vertical position to power on the vehicle;

3. 下车时，逆时针旋转红色旋钮 90°至水平状态，使整车处于断电状态；

3. When getting off the vehicle, turn the red knob 90° counterclockwise to a horizontal position to power off the entire vehicle;

二、 安全性

II. Safety

1、 安全带

1. Seat belt

⚠ *佩戴或使用安全带不当可能导致严重的人身伤害或死亡。安全带属于救生设备。发生事故时，未受到保护的乘员可能会与车内的任何一处发生碰撞，也很可能会被抛出车外，从而导致自身或他人受伤。*

⚠ *Improper wearing or use of seat belts may result in serious personal injury or death. The seat belt is a life-saving device. In the event of an accident, unprotected occupants may collide with any part of the vehicle or be thrown out of the vehicle, resulting in injury to themselves or others.*

乘车时，驾驶员和任何成年人（或体型高度相当于成人的儿童）必须始终佩戴安全带。切勿将系在身上的安全带拉松。

When riding, the driver and any adult (or child with a height equivalent to an adult) must always wear seat belts. Do not loosen the seat belt worn on your body.

为确保最好的保护效果，必须始终将安全带紧固在身体周围。避免穿着很厚、体积很大的衣物。切勿将一条安全带用于多个成年人，也不要用其固定额外的物体或儿童。

To ensure the best protection effect, the seat belt must always be fastened tightly around your body. Do not wear thick and bulky clothing. Do not use a seat belt for more than one adult, and do not fix additional objects or children with it.

佩戴安全带时，带子应平直而不松弛，否则将不利于安全带的顺利操作，且锁扣按钮必须朝外。切勿将婴儿或儿童抱在腿上，碰撞时他们会变得很沉重，以致根本无法抱住。

When wearing the seat belt, the strap shall be straight and not loose, and the buckle shall face outward; otherwise, it may hinder the proper operation of the seat belt. Do not hold babies or children on your legs, as they will become too heavy to hold in a collision.

切勿让异物(尤其是含糖的食品和饮料)进入安全带锁扣，此类物质可能使锁扣失效。车辆在承受过严重碰撞后，或安全带有磨损或断裂等迹象时，务必更换安全带总成。

Please keep foreign matters (especially sugary food and beverages) out of the seat belt buckle, as such substances may cause the buckle to fail. Be sure to replace the seat belt assembly after the vehicle has suffered a severe collision or when there are signs of wear or breakage of the seat belt.

孕妇应询问医生如何佩戴安全带最安全。

Pregnant women should ask their doctor how to wear seat belts in the safest way.

不应以任何方式改造或改变安全带，因为这样可能使安全带失效。切勿拆开、修理或润滑伸缩装置或锁扣机构。未使用时，务必正确收放好安全带。

The seat belt shall not be modified or altered in any way, as this may cause the seat belt to fail. Do not disassemble, repair or lubricate the telescopic device or locking mechanism. Be sure to properly retract the seat belt not in use.

本系列车辆配置胯-肩式安全带，胯-肩式安全带又分高度可调和不可调两类。

This series of vehicles is equipped with lap-shoulder seat belts, which are further divided into two types: height-adjustable and non-height-adjustable.

1.1 安全带使用

1.1 Use of seat belt

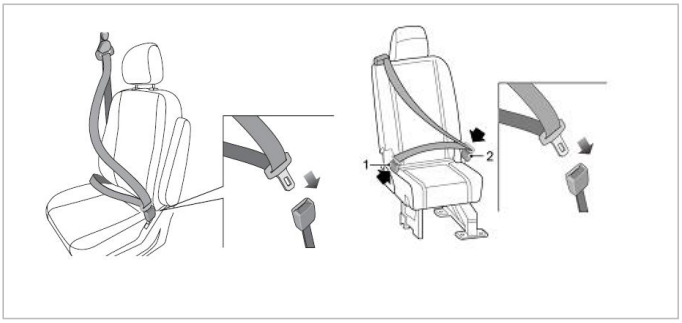

高度可调式 **高度不可调式**

Height-adjustable **Height - non-adjustable**

将锁舌推入锁扣时，需听到清晰的“喀哒”声才表

明安全带已锁上。平稳地将安全带从卷轴中拉出，从肩部系往身体前部，然后将锁舌推入锁扣中。

When the latch plate is pushed into the buckle, a clear "click" sound should be heard to indicate that the seat belt has been locked. Pull the seat belt out of the reel smoothly, pass it from your shoulder across the front of your body, and then insert the latch plate into the buckle.

注意：

Caution:

如果拉出速度太快或车辆位于斜坡上，可能导致安全带锁定。

If the pull-out speed is too fast or the vehicle is on a slope, the seat belt may be locked.

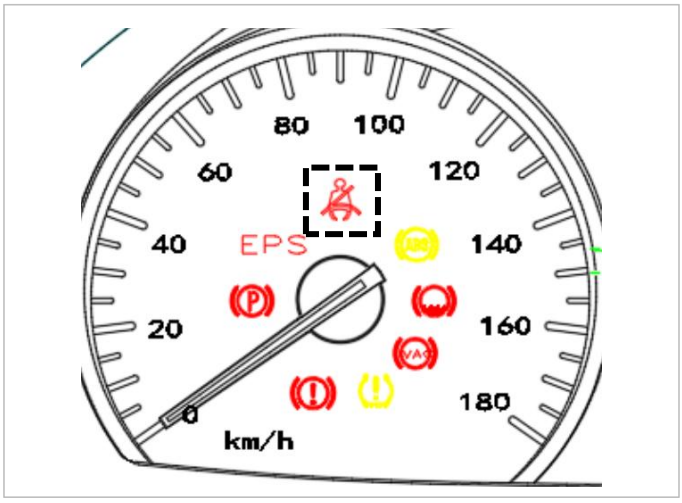

当车辆起步后，驾驶员座椅的安全带未系上或者未能正确啮合时，安全带警告灯不会熄灭。

When the driver's seat belt is not fastened or engaged correctly after the vehicle starts, the seat belt warning light will not go out.

注意：

Caution:

只有驾驶员座椅的安全带锁舌和锁扣正确啮合后，信息中心显示屏上“安全带警告灯（红色）”才会熄灭。

The "seat belt warning light (red)" on the information center display screen will go out only after the seat belt latch plate and buckle of the driver's seat are correctly engaged.

1.2 安全带高度调整

1.2 Seat belt height adjustment

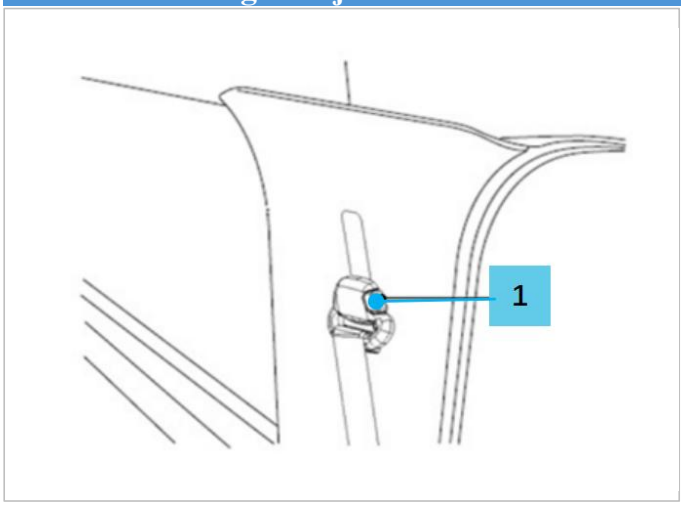

仅驾驶员和前排乘员座椅的胯-肩式安全带高度可调。

The height of the lap-shoulder seat belt is adjustable only for the seats of driver and front passenger.

调整之后，确保滑动调节器固定。

After adjustment, make sure that the slide adjuster is fixed.

切勿在行驶时调整驾驶员安全带的高度，否则车辆可能会失去控制。

Do not adjust the height of the driver's seat belt while driving; otherwise, the vehicle may be out of control.

向下按动按钮（1）并上下滑动安全带顶部的滑动调节器，以适应乘员的高度。到合适的位置后松开按钮(1)。

Press the button (1) downward and slide the slide adjuster on top of the seat belt up and down to fit the height of the occupant. Release the button (1) after reaching a suitable position.

1.3 安全带检查

1.3 Seat belt inspection

检查所有安全带固定点的安全性。

Check the safety of all seat belt anchorages.

将锁舌插入锁扣中，并检查锁定动作是否明确。按下红色按钮，检查锁舌是否利落地松出。

Insert the latch plate into the buckle and check whether the locking action is smooth. Press the red button to check whether the latch plate is released immediately.

在带子半松情况下，握住锁舌并急拉一下。检查安全机构是否能自动锁定并防止进一步松动。

When the seat belt is partially slack, hold the latch plate and give it a sharp pull. Check whether the safety

mechanism can automatically lock and prevent further loosening.

注意：

Caution:

- *安全带含有敏感的伸缩装置，只有在猛然加速、减速或大幅弯曲时才会锁定。*
- *The seat belt contains a sensitive retractor that locks only during sudden acceleration, deceleration, or sharp turns.*
- *不要通过上半身有意猛然向前发力的方式来测试锁定装置。*
- *Do not test the locking device by deliberately exerting a sudden forward force on the upper body.*

2、 安全气囊

2. Airbag

⚠ *安全气囊绝不是安全带的替代物，而是汽车被动安全系统的一部分。即使已正确佩戴安全带且安全气囊已充气，仍然可能造成人身伤害甚至死亡。*

⚠ *Airbags are by no means a substitute for seat belts, but part of the passive safety system of the vehicle. Even if the seat belt is worn correctly and the airbag is inflated, personal injury or even death may still be caused.*

充气后，安全气囊某些部件的温度将很高，切勿在其冷却前与其接触。

After inflation, the temperature of some airbag components will be very high. Do not contact them before they cool down.

安全气囊充气时可能导致乘员面部擦伤或其它伤害，只要确保您和您的乘员佩戴了安全带，就可以将此类伤害降至最低。

Airbag inflation may cause face scratches or other injuries to passengers. As long as you and your occupants wear seat belts, such injuries can be minimized.

在不影响驾驶的情况下，应尽量将驾驶员座椅向后调。

Adjust the driver's seat backward as far as possible without affecting driving.

务必握住转向盘的边缘，以便安全气囊充气时不会受到妨碍。

Be sure to hold the edge of steering wheel so that the airbag inflation will not be hindered.

切勿将附属物体（如手机架、杯座、托盘）放在转向盘盖或仪表板的安全气囊盖板上，也不要将任何物体粘贴在（或插入）安全气囊模块护盖。否则将影响安全气囊充气，或者当安全气囊充气后，这些物体将被冲到车内的任意位置，从而造成乘员受伤。

Do not place any accessory (such as a phone holder, cup holder, or tray) on the steering wheel cover or the airbag cover of the instrument panel, nor stick or insert any object onto or into the airbag module cover. Otherwise, the airbag inflation will be affected, or when the airbag is inflated, these objects will be rushed to any position in the vehicle, resulting in injury to occupants.

切勿让乘员用脚、膝等接触或接近仪表板的安全气囊盖板，否则将妨碍安全气囊的展开。

Do not allow occupants to touch or approach the airbag cover plate of the instrument panel with their feet and knees; otherwise, it will hinder the deployment of the airbag.

切勿拆下或猛烈敲击转向盘，也不要在转向盘上冲孔。

Do not remove or violently knock the steering wheel, nor punch holes in it.

切勿让他人、动物或物体占据驾驶员与安全气囊展开范围之间的空间。安装了安全气囊的乘员侧亦是如此。

Do not allow others, animals or objects to occupy the space between the driver and the deployment range of airbag. The same applies to the occupant side equipped with airbags.

切勿自行检修转向盘、转向管柱、任何安全气囊装置、预紧器组件或周围有布线的安全气囊组件，否则可能使安全气囊被意外触发，从而造成人员伤亡。

Do not check and repair the steering wheel, steering column, any airbag device, pretensioner component or airbag components with wiring around by yourself; otherwise, the airbag may be triggered accidentally, resulting in personal injury or death.

切勿以任何方式改造车辆的前部，因为这样可能不利于安全气囊的展开。

Do not modify the front part of the vehicle in any way, as this may hinder the deployment of the airbag.

3、乘员保护

3. Occupant protection

3.1 正确就座

3.1 Proper seating

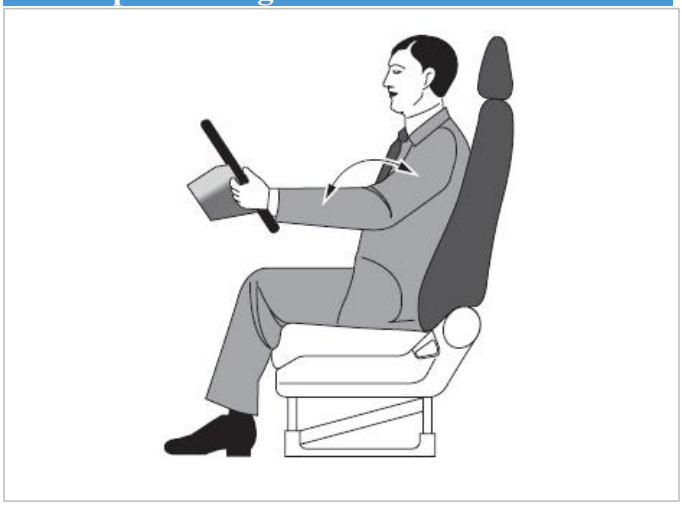

座椅和乘员保护装置设计用于发生事故时将人员伤风险降至最低。为实现最佳效果，应遵守以下几点。

The seats and occupant protection devices are designed to minimize the risk of personal injury in the event of an accident. The following points shall be observed for the best results.

- 切勿使座椅过分靠近转向盘。
- Do not place the seat too close to the steering wheel.
- 切勿使座椅过分倾斜。不要将座位靠背倾斜超过30°，这样您就可以在手臂稍微弯曲的情况下垂直坐立，且脊柱底部尽量朝后。
- Do not tilt the seat too much. Do not tilt the seat back more than 30°, so that you can sit upright with your arms slightly bent and the bottom of your spine as far backwards as possible.
- 应当将头枕的中心调整至您的头后部而不是颈部。
- The center of the headrest should be adjusted to the back of your head rather than your neck.
- 胯-肩式安全带应当经过您的肩膀中心（必要时调整其高度）。
- The lap-shoulder seat belt should pass through the center of your shoulder (adjust its height if necessary).

3.2 盲点探测开关

3.2 Blind spot detection switch

此开关控制乘客安全带报警蜂鸣器，按下即可将乘客安全带报警蜂鸣器开启，再按下即可关闭。按下此开关，开关上的“乘客安全带指示灯（橙色）”点亮，以表示乘客安全带报警功能开启，再次按下开关以关闭乘客安全带报警功能，指示灯熄灭。

This switch controls the occupant seat belt alarm buzzer. Press it to turn on and press it again to turn off the buzzer. Press this switch, and the "occupant seat belt indicator (orange)" on it will illuminate to indicate that the occupant seat belt alarm function is enabled. Press this switch again to disable the occupant seat belt alarm function, and the indicator will go out.

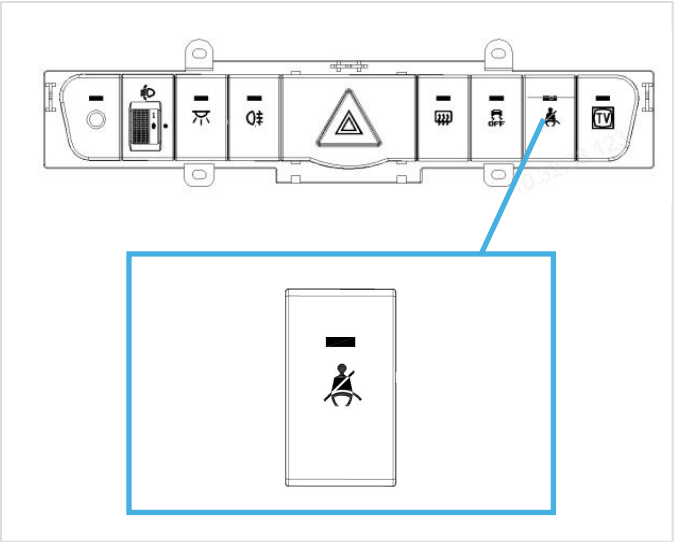

4、 灭火器

4. Fire extinguisher

4.1 灭火器位置

4.1 Position of fire extinguisher

干粉灭火器一般安置在司机座旁或后排乘员座椅下方。

Dry powder fire extinguishers are generally placed next to the driver's seat or under the rear occupant seat.

4.2 灭火器使用方法

4.2 Operation instructions for fire extinguisher

- 摇晃灭火器。
- Shake the fire extinguisher.
- 手持灭火器，距离燃烧物 5 米处，将灭火器压把根部的铅封去除，并拔除压把根部的保险销。
- Hold the fire extinguisher in hand, keep a distance of 5 meters away from the combustibles, remove the lead seal at the root of the handle of the fire extinguisher, and pull out the safety pin at the root of the handle.
- 持灭火器寻找有利位置。左手托住灭火器底部右手用力握紧灭火器压把，将喷嘴对着火源上下左右扫射，以扑灭火源。
- Hold the fire extinguisher to find a favorable position. Hold the bottom of the fire extinguisher with your left hand, and hold the handle firmly with your right hand to sweep the nozzle side to side against the fire source to put out the fire.

4.3 灭火器检查方法

4.3 Inspection method of fire extinguisher

通过压把上的圆盘绿、黄、红三个区间来判断，当指针指向绿区时，表明灭火器压力充沛可正常使用；当指向黄区则表示灭火器压力已不足但尚能使用即将过保；若指向红色区域，则表明压力已泄漏已无法使用需购买新灭火器替换。

Judgment should be made based on the green, yellow, and red zones on the pressure gauge located on the handle. When the pointer is in the green zone, it means the fire extinguisher has sufficient pressure and can be used normally. When the pointer is in the yellow zone, it indicates that the pressure is insufficient but the extinguisher can still be used, and it is about to reach its expiration date. If the pointer is in the red zone, it means the pressure is leaked, the extinguisher cannot be used, and it must be replaced with a new one.

注意：

Caution:

- *灭火器从车辆出厂日期起应定期年检，并按规定要求更换。*
- *The fire extinguisher shall be regularly inspected annually from the delivery date of the vehicle and replaced as required.*
- *灭火器的年检或使用后的修复，须送至消防局认可的具有消防器材检测维修年检相关资质的企业进行。*
- *The annual inspection or repair of fire extinguishers after use must be sent to an enterprise approved by the Fire Department with relevant qualifications for annual inspection and maintenance of fire equipment.*
- *如果将车辆出售，车主应有义务告知购买者上述注意事项。*
- *If the vehicle is sold, the owner shall be obliged to inform the purchaser of the above precautions.*

三、 驾驶说明

III. Driving Instructions

1、 新车磨合

1. Running-in of new vehicle

本车无需刻意的“磨合”，为了提高车辆的长期运行性能，我们建议您遵守如下几点：

This vehicle does not need deliberate "running-in". To improve the long-term running performance of the vehicle, we recommend that you observe the following:

在首个1600 公里行驶时：

In the first 1600 km:

- 避免行驶过快和频繁变速。
- Avoid driving too fast and changing speed frequently.
- 切勿在任意挡位把加速踏板踩到最底位置。
- Do not depress the accelerator pedal to the lowest position in any gear.
- 避免过度使用紧急制动。
- Avoid overusing the emergency brake.

行驶1600 公里后，您可以逐步将车速增加至最大许可速度。

After 1600 km, you can gradually increase the vehicle speed to the maximum allowable speed.

进入车辆前

Before entering the vehicle

目视检查轮胎是否损坏或充气压力是否合适以及轮胎内是否嵌入异物。必要时采取校正措施。

Visually check whether the tires are damaged, whether the inflation pressure is appropriate, and whether any foreign objects are embedded in the tires. Take corrective action if necessary.

电动机启动

Motor start

在电动机启动之前

Before starting the motor

检查轮胎状况，充气压力是否适当以及是否有外来物体。

Check whether the tire conditions and the inflation pressure are proper and whether foreign matters exist.

及时充电

Charge the vehicle in time

当仪表中显示电量不足时，请及时进行充电。

When the instrument displays low battery, please recharge promptly.

2、 行车

2. Driving

2.1 充电

2.1 Charging

充电警告

Charging warning

- 请选择在相对较安全的环境下充电（如避免有液体、火源等环境）。不要修改或者拆卸充电端口和充电设备，这样可能导致充电故障，引起火灾。
- Please charge the vehicle in a relatively safe environment (no liquids or open flames). Do not modify or remove the charging port or charging equipment, as this may cause charging malfunctions and lead to fires.
- 充电前请确保车辆充电口和充电连接器端口内没有水或外来物，及金属端子没有生锈或者腐蚀造成的破坏或者影响，这些情况下不允许充电。因为不正常的端子连接可能导致短路或电击，威胁生命安全。
- Before charging, please ensure there is no water or foreign matters in the vehicle charging port and charging connector port, and the metal terminal has not been damaged or affected by rust or corrosion; in these cases, charging is not permitted. Abnormal terminal connections may cause short circuits or electric shocks, posing a threat to personal safety.
- 如果在充电时发现车里散发出一种不同寻常的气味或者烟，请立即停止充电。
- If you find an unusual smell or smoke in the car while charging, please stop charging immediately.

- 为了避免造成严重的人身伤害，车辆正在充电时，
- To avoid serious personal injury, when the vehicle is charging,
- 要有以下预防意识：
- be aware of the following precautions:

——不要接触充电端口或者充电连接器内的金属端子；

-Do not contact the charging port or metal terminal in the charging connector;

——当有闪电时，不要给车辆充电或触摸车辆，闪电击中可能导致充电设备损坏，引起人身伤害。

-Do not charge or touch the vehicle during a thunderstorm, as lightning may damage the charging equipment or even cause personal injury.

- 充电结束后，不要以湿手或站在水里时去断开充电器，因为这样可能引起电击，造成人身伤害。
- After charging, do not disconnect the charging plug with wet hands or when standing in water, as this may cause electric shock and result in personal injury.
- 车辆行驶前请确保充电连接器从充电口断开，如果充电连接器没有完全连接，即插销没有锁住，这很可能使车辆处于可行驶状态。
- Before driving, make sure that the charging connector is disconnected from the charging port. If the charging connector is not fully connected, i.e., the latch is not locked, the vehicle may still be in a drivable state, which could pose a safety hazard.
- 如果你想在车内使用任何医学设备，在使用之前请和制造商确认充电是否影响设备的正常工作，充电时可能导致设备的不正常操作，造成人身伤害。
- If you wish to use any medical device in the vehicle, before use, confirm with its manufacturer whether charging will affect the normal operation of the device, as charging may result in abnormal operation of the device and even personal injury.

注意事项：

Precautions:

- 当仪表 SOC 指示条进入红色警戒格时，表明动力电池电量已不足。推荐客户在电量降至警戒红格时即去充电，可以确保不会因电量不足而无动力搁浅，不推荐在电量耗尽后再进行充电，因为那样会影响电池的使用寿命。
- When the SOC indicator bar on the combination instrument drops into the red zone, it indicates a low battery. It is recommended to charge the vehicle immediately after the indicator bar drops into the red zone to prevent the vehicle from getting into the powerless state due to low battery. It is not recommended to charge the vehicle after the battery runs out, because doing so may affect the service life of power battery.
- 当环境温度为 23℃左右时，采用 170A 充电，充满 80%电量需要时间约为 60 分钟。
- When the ambient temperature is around 23°C, it takes about 60 minutes to charge the battery to 80% with 170A.
- 家用交流充电是使用车辆配备的交流充电连接装置进行充电的。推荐使用 220V 50Hz 60A 的专用交流电路和电源插座。专用电路是为了避免线路破坏或者由于给电池充电时的大功率导致线路跳闸保护，如果没有使用专用线路，可能影响线路上其他设备的正常工作。如果一个专用线路已经不能使用，应由专业电工来安装。
- Household AC charging refers to charging with the AC charging connection device equipped on the vehicle. It is recommended to use a dedicated AC circuit and power outlet of 220V, 50Hz, 60A. The dedicated circuit is used to prevent circuit damage or circuit tripping protection due to high power during battery charging. If a dedicated circuit is not used, it may affect the normal operation of other devices on the same circuit. If a dedicated circuit cannot be used, it shall be reinstalled by a specialized electrician.
- 为了避免对充电设备造成破坏：
- To avoid damage to the charging equipment:

—不要在充电口盖打开的状态下关闭充电口舱门。

- Do not close the charging port hatch when the charging port cover is open.

—不要用力拉或者扭转充电电缆。

- Do not pull on or twist the charging cable roughly.

—不要使充电设备承受撞击。

- Protect the charging equipment from any impact.

—不要在温度高于 50℃的环境下存放或者使用充电设备。

- Do not store or use the charging equipment in the environment above 50°C.

—不要把充电设备放在靠近加热器或其他热源的地方。

- Do not place the charging equipment near a heater or other heat sources.

- 当外部电网断电时，充电会自动重新启动充电，不用重新连接充电器。
- If the external power grid is disconnected, the charging will restart automatically, without reconnecting the charger.
- 充电时，不建议人员停留在车辆内。
- It is not recommended for individuals to remain inside the vehicle while charging.
- 充电时，建议将车辆停放在通风处。
- It is recommended to park the vehicle in a well-ventilated area while charging.
- 如果你有一个医学设备，请和制造商确认充电时对车内的医学设备是否有影响。
- If you have a medical device in the vehicle, please confirm with its manufacturer whether charging will affect the device.
- 充电时电源挡位需处于 OFF 挡，电源为 ON（OK）挡时不能充电，不建议电源为 ACC 挡时充电。
- When charging, the power should be in OFF position, and charging cannot be performed when the power is in ON (OK) position. It is not recommended to charge with the power in ACC position.
- 直流充电时，动力电池电源管理系统处于工作状态，此时会发出几次继电器吸合的“咔哒”声；交流充电时，机舱内的车载充电器也是处于工作状态，车载充电器的冷却风扇工作时会有“嗡嗡”声，均属正常状态。
- During DC charging, the battery management system of the traction battery is operating, and you may hear several 'click' sounds as the relays engage. During AC charging, the on-board charger in the engine compartment also operates, and you may hear a 'buzzing' sound when its cooling fan is running. Both are normal.
- 充电时请离开充电车辆并严格按照充电站的要求进行充电。因高压危险，请站于安全线以外。
- Please leave the charging vehicle and strictly follow the requirements of the charging station when charging. Due to high voltage risk, please stand outside the safety line.
- 当动力电池电量充满后，系统会自动停止充电。
- After the power battery is fully charged, the system will automatically stop charging.
- 停止充电时应先将充电柜或充电桩关闭，再断开充电器；家用交流充电时应先断开交流充电器，再断开插座端电源。
- When stopping charging, first turn off the charging cabinet or charging pile, then disconnect the charger; when charging with household AC, disconnect the AC charger first, then turn off the socket power.
- 启动车辆前请确保充电器已经断开，充电口盖和充电口舱门已经关闭，因为充电器锁止机构没有完全锁止状态下，车辆可能会上 ON（OK）挡。充电口盖未关闭，水或外来物质可能进入充电口端子，影响正常使用。
- Before starting the vehicle, please ensure that the charger has been disconnected, and both the charging port cover and the charging port door are closed, because if the charger locking mechanism is not fully locked, the vehicle may switch to the ON (OK) position. If the charging port cover is open, water or foreign matters may enter the charging port, affecting the normal function.
- 当环境温度低于 0℃时，充电时间要比正常时间要长，充电能力较低。
- When the ambient temperature is lower than 0℃, the charging capacity is lower and the charging time is longer than normal.
- 如果车辆长时间不使用，为了延长动力电池的使用寿命，建议每 3 个月充电一次。
- If the vehicle is not used for a long time, it is recommended to charge the power battery every 3 months to prolong its service life.
- 充电时，电源开关可以设置到“ON”挡的位置，交流充电时，充电时间会延长，直流充电时不建议长时间置于“ON”挡
- During charging, the power switch can be set to "ON" position. During AC charging, the charging time will be prolonged. During DC charging, it is not recommended to set it to "ON" position for a long time.

充电方式

Charging mode

为了避免车辆因动力电池过放电而导致车辆无法行驶，及时充电储能及行驶前计算电量需求是非常重要的。有三种充电方法可以为车辆的动力电池充电：

To prevent the vehicle from being unable to drive due to power battery over-discharge, it is very important to charge and store energy in time and to calculate the power demand before driving. The power battery of the vehicle can be charged using any of the following three methods:

- 充电站直流充电
- DC charging at charging station
- 充电桩交流充电
- AC charging with charging pile
- 家用交流充电
- Household AC charging

动力电池充电完成所需时间基于充电方法，动力电池的剩余电量、实时温度、使用时间，环境温度、条件而变化。使用说明书里给出的数据与实际充电所需时间会有差别。

The charging time of power battery varies along with charging method, state of charge, real-time temperature, service time, ambient temperature and conditions. There will be some difference between the data given in the owner's manual and the actual charging time.

◆ **充电站直流充电**

◆ **DC charging at charging station**

1、 性能参数：

1. Performance parameters:

输入电压：650V DC　　输入电流：100A DC

Input voltage: 650V DC　　Input current: 100A DC

充电时间：2 小时　　充电模式：即时充电

Charging time: 2 hours　　Charging mode: instant charging

2、 充电方法：

2. Charging method:

1) 电源档位置为 OFF 档；

1) The power switch is set to the OFF position;

2) 打开充电口舱门；

2) Open the charging port hatch;

3) 打开直流充电口盖；

3) Open the DC charging port cover;

4) 连接直流充电器；

4) Connect the DC charger;

5) 充电柜设置开始充电，仪表点亮充电连接指示灯；

5) Set the charging cabinet to start charging. The instrument panel will light up the charging connection indicator.

6) 充电完成，直接断开充电器，如临时结束充电，充电柜设置结束充电；

6) After charging is completed, disconnect the charger directly. If charging is temporarily terminated, set the charging cabinet to end charging;

7) 断开直流充电器，按下开关，拔出直流充电器，并将充电器放在指定位置；

7) Disconnect the DC charger, press the switch, unplug the DC charger, and place it in the designated position;

8) 关闭充电口盖和充电口舱门；

8) Close the charging port cover and charging port hatch;

9) 直流充电结束。

9) DC charging ends.

◆ **充电桩或家用交流充电**

◆ **Charging pile or household AC charging**

1、 性能参数：

1. Performance parameters:

输入电压：220V AC　输入电流：30A AC

Input voltage: 220V AC　　Input current: 30A AC

充电时间：19 小时　充电模式：即时充电

Charging time: 19 hours　　Charging mode: instant charging

2、 充电方法：

2. Charging method:

1) 电源档位置为 OFF 档；

1) The power switch is set to the OFF position;

2) 打开充电口舱门；

2) Open the charging port hatch;

3) 打开交流充电口盖；

3) Open the AC charging port cover;

4) 连接交流充电器；

4) Connect the AC charger;

5) 充电柜设置开始充电，仪表点亮充电连接指示灯；

5) Set the charging cabinet to start charging. The instrument panel will light up the charging connection indicator.

7) 断开交流充电器，按下开关，拔出交流充电器，并将充电器放在指定位置；

7) Disconnect the AC charger, press the switch, unplug the AC charger, and place it in the designated position;

8) 关闭充电口盖和充电口舱门；

8) Close the charging port cover and charging port hatch;

9) 交流充电结束。

9) AC charging ends.

2.2 动力电池的使用说明

2.2 Operating instructions for power battery

电池工作温度

Working temperature of battery

电池的工作温度要求分为充电温度要求和放电温度要求，具体要求如下：

The operating temperature requirements of the battery are divided into charging temperature requirements and discharging temperature requirements. The specific requirements are as follows:

（1） 充电温度范围为：0-55℃，低温环境下大倍率充电会对电池造成一定程度的损害。

(1) The charging temperature range is: 0-55°C. Charging at a high rate in a low temperature environment will cause some damage to the battery.

（2） 放电温度范围为：-20-60℃，低温下（-20-0℃）的放电容量较常温条件下相比可能会有所降低，这是正常现象；电池可以在 45-55℃环境温度下使用，但电池的环境温度过高，尤其电池长期处在高温环境下，会加速电池内部材料的老化，缩短电池的使用寿命，因此不推荐长期在此温度下使用。

(2) The discharge temperature range is: -20-60°C, the discharge capacity at low temperature (-20-0°C) may be lower than that under normal temperature conditions, which is a normal phenomenon; The battery can be used at an ambient temperature of 45-55°C, but if the ambient temperature of the battery is too high, especially if the battery is in a high temperature environment for a long time, it will accelerate the aging of the internal materials of the battery and shorten the service life of the battery. Therefore, it is not recommended to use it at this temperature for a long time.

（3） 环境温度超出上述充放电温度范围使用，会对电池性能造成负面影响或损害，可能大大缩短电池的使用寿命，因此应避免在上述温度下使用。

(3) If the ambient temperature exceeds the above charging and discharging temperature range, it may have a negative impact on or cause damage to battery performance, and may greatly shorten the battery life. Therefore, use outside the above temperature range should be avoided.

使用注意事项

Precautions for use

⚠ ***请严格按照电池包使用说明书规定条件使用电池包，否则可能不被包含在质保范围内。***

⚠ ***Please use the battery pack strictly in accordance with the conditions specified in the battery pack manual, otherwise it may not be covered by the warranty.***

(1) 请勿在温度超过 55℃的环境下操作装有电池包的电动车辆。

(1) Do not operate electric vehicles equipped with battery packs in an environment where the temperature exceeds 55°C.

(2) 当环境温度低于 0℃时，请停止给电池包/车辆充电。

(2) Please stop charging the battery pack/vehicle, when the ambient temperature is below 0°C.

(3) 请尽量避免电池包涉水。

(3) Please try to avoid exposing the battery pack to water.

(4) 电池包长期储存(储存时间超过 6 个月)时，需完全断电，厂家推荐在 50%SOC 荷电态下储存，储存环境湿度不低于 95%RH。

(4) When the battery pack is stored for a long time (more than 6 months), it needs to be completely powered off. The manufacturer recommends storing it at 50% state of charge (SOC), and the storage environment humidity should not be more than 95% RH.

(5) 非专业人士，请勿触碰、移动、拆解电池包及相应的高压线缆，或其他带有高压警示标识的部件。

(5) Non-professionals are not allowed to touch, move or disassemble the battery pack and corresponding HV cables, or other components with HV warning signs.

(6) 如果车辆行驶过程中受到强烈碰撞，需在安全

区域停止车辆并检查车辆底盘及车身前后电池包区域是否受损。

(6) If the vehicle is hit hard while driving, it is necessary to stop the vehicle in a safe area and check whether the vehicle chassis and the front and rear battery pack areas of the body are damaged.

(8) 如发现电池包泄露（液体或烟雾）、破损，请远离直至安全距离，并联系授权服务店。

(8) If the battery pack is found to be leaking (liquid or smoke) or damaged, please stay away to a safe distance and contact an authorized service store.

(9) 当发生电解液泄露时，请勿接触；若不慎接触时，迅速用大量水清洗，若眼睛接触时，迅速用大量硼酸溶液清洗，并迅速就医。

(9) When electrolyte leakage occurs, do not touch it; if you accidentally touch it, wash the contracted area quickly with plenty of water. If your eyes come into contact with it, wash your eyes quickly with a large amount of boric acid solution and seek medical attention immediately.

(10) 当车辆或电池包起火时，迅速离开车辆直至安全距离。灭火请使用电火专用灭火器，使用水灭火或不正确灭火器灭火可能会导致触电。

(10) When the vehicle or battery pack catches fire, quickly leave the vehicle until you reach a safe distance. Use a fire extinguisher rated for electrical fires. Using water or an incorrect extinguisher may cause electric shock.

(11) 由于电池的特性，在公司三包期限内电池容量衰减度在 10%—30%之间是被允许的。

(11) Due to the characteristics of batteries, battery capacity attenuation between 10% and 30% is allowed within the company's three-guarantee period.

3、 各种驾驶情况

3. Various driving situations

3.1 夜间行车

3.1 Driving at night

夜间行车要比白天行车危险，原因之一是受到夜间视野问题和疲劳的困扰。

Driving at night is more dangerous than driving during the day. One of the reasons is that it is plagued by vision problems and fatigue at night.

友情提示:

Tips:

- 谨慎驾车。
- Drive carefully.
- 不要酒后驾车。
- Do not drive after drinking.
- 与其他车辆保持更大的车距。
- Keep a greater distance from other vehicles.
- 减速行驶。
- Driving at reduced speed.
- 在偏远地区行车时，当心动物。
- Beware of animals when driving in remote areas.
- 如果感到疲劳，把车辆靠在路边安全处休息。
- If you are tired, pull over the vehicle to a safe place to rest.
- 保持前窗玻璃和所有玻璃的内外表面清洁。
- Keep the inside and outside of the windshield and all windows on the vehicle clean.
- 如对方驾驶员未将前照灯的远光灯变为近光灯或对方车辆前照灯对光不正，应放慢车速，避免直视对面来车的前照灯。
- If the oncoming driver does not switch the high beam to low beam or the headlamps of the oncoming vehicle are not properly aligned, slow down and avoid looking directly at the oncoming headlights.

3.2 市区行车

3.2 Driving in urban area

市区行车最大的问题之一就是市区街道的车流量。您必须密切关注其他驾驶员的行为并同时注意交通信

号灯。

One of the biggest problems with urban driving is the heavy traffic on city streets. You must pay close attention to the behavior of other drivers and traffic lights.

友情提示:

Tips:

- 系好安全带。
- Fasten the seat belt.
- 了解到达目的地的最佳路线，熟记行车路线。
- Understand the best route to your destination and remember the driving route.
- 调整驾驶员坐姿。
- Adjust the driver's sitting posture.
- 在过交叉路口或行驶在混合交通道路上时最好以中低速行驶，随时准备制动，以防备非机动车突然变线。
- When passing an intersection or driving on a road with mixed traffic, it is best to drive at low or medium speed and always be ready to brake in case non-motorized vehicles suddenly change lanes.
- 认清交通标识。
- Recognize the traffic signs.
- 提高应变能力。
- Improve the adaptability.

3.3 长途行车

3.3 Long-distance driving

在长途行车之前确认您已做好相关准备，并尽量休息好。如果必须在精神状态不佳时出发，则在行车的最初阶段不要行驶太多的里程。

Before long-distance driving, please make sure that relevant preparations are made and try to have a good rest. If it is necessary to drive when you are in a bad mental state, do not drive for a long time during the initial stage of driving.

友情提示:

Tips:

- 检查洗涤液罐是否装满，所有车窗的内外侧是否清洗干净。
- Check whether the washer fluid reservoir is full and whether the inner and outer sides of all windows are cleaned.
- 检查电量是否充足及相关油液是否达到规定油液液面。
- Check whether the battery is sufficiently charged and whether the relevant fluids (such as engine oil and brake fluid) have reached the specified level.
- 检查车灯是否都正常工作。
- Check whether all lights work normally.
- 检查车灯表面是否清洁。
- Check whether the light surface is clean.
- 检查轮胎胎面花纹是否适合长途行驶及所有轮胎是否已充气至推荐的气压值。
- Check whether the tire tread pattern is suitable for long-distance driving and whether all tires have been inflated to the recommended air pressure value.

3.4 坡道和山区路面行车

3.4 Driving on ramps and mountainous roads

如果您经常在险峻的山道上驾车，或者您打算去那儿，下面的建议会使您的旅行更安全。

If you often drive on steep mountainous roads or if you intend to, the following suggestions will make your journey safer.

保持良好的车况

Keeping the vehicle in good condition

检查所有油液液面以及制动器、轮胎、冷却系统等关键行车要素。这些系统在山路行车时负荷很大。

Check all fluid levels and key driving elements such as brakes, tires and cooling system. These systems are heavily loaded when driving on mountainous roads.

掌握好下坡技巧

Mastering downhill skills

利用驱动电机制动效应来减速。下陡坡或长坡时松开电门踏板，适当踩刹车，既能实现制动，也可实现能量回收。

Making use of the braking effect of the drive motor to decelerate. When going down a steep slope or long slope, release the switch pedal and depress the brake appropriately to realize both braking and energy recovery.

上坡越过坡顶时注意事项

Precautions for climbing over the top of the slope

上坡越过坡顶时要特别注意，在您的车道上可能会有障

碍物（如熄火的车辆等）。

Pay special attention when climbing over the top of the slope, because there may be obstacles in your lane (such as vehicles with engines not running).

注意特殊的警告标志

Pay attention to special warning signs

在山区公路上可能会看到特殊的警告标志（如长坡、超车区或禁止超车区、坠石区、弯道）。驾车时须注意这些信号并采取适当措施。

You may see special warning signs on mountain roads, such as steep slopes, passing zones or no-passing zones, falling rock zones, and curves. During driving, please pay attention to these signals and take appropriate measures.

4、 冬季驾驶

4. Driving in winter

冬季的恶劣驾驶环境可增大车辆的磨损程度或引起其他故障。要减少冬季车辆故障，请参照以下建议：

Harsh driving environment in winter will increase vehicle wear or cause other faults. In order to reduce vehicle faults in winter, please refer to the following suggestions:

- **尽量避免激烈驾驶**
- **Try to avoid intense driving**

冬季低温情况，急加速会使电池处于大电流放电状态，一方面影响续驶里程，另一方面加大了对电池内部构造的损坏可能。

In low temperature in winter, sudden acceleration will make the battery in a high-current discharge state, which on the one hand affects the driving range and on the other hand increases the possibility of damage to the internal structure of the battery.

- **驾车前热车**
- **Warm up before driving**

冬季长时间的低温环境，电池会出现低温衰减的情况。建议在冷车启动时，先低速行驶一段距离，为动力电池预热。

In the low temperature environment for a long time in winter, the battery will suffer from low-temperature attenuation. It is recommended to drive at a low speed for a certain distance to preheat the power battery during cold start.

- **尽量使用慢充**
- **Try to use slow charging**

温度降低会导致慢充时间增加，但慢充时电池处于浅循环状态，可延长电池使用寿命。

A drop in temperature will increase the time required for slow charging, but the battery undergoes shallow cycling during slow charging, which can prolong its service life.

- **尽量避免满充满放**
- **Avoid full charging and discharging**

尽量避免满充满放的情况，将电池的电量控制在一定的范围内，尽可能地不要让电池的电量彻底用完。建议随用随充，及时充电，减少给电池预热的时间，缓解冬季充电时间过长、充电量较少的现象。

Avoid full charging and discharging, control the battery power within a certain range, and try not to run out of power completely. It is recommended to charge as needed and in a timely manner to reduce the time needed to preheat the battery and mitigate the issues of excessively long charging times and insufficient charging in winter.

- **车辆污渍及时清理**
- **Clean the vehicle stains in time**

冬季降雪，要随时观察充电枪和充电口处是否有积雪等，避免在充电时造成短路等问题。

During winter snowfall, regularly check for snow accumulation at the charging gun and charging port to avoid short circuits during charging.

- **尽量停在室内停车场**
- **Try to park in an indoor parking lot**

室内停车场可避免在极低温环境下充电，有利于提升动力电池的活性，减少续航里程损失，提高充电效率。

Indoor parking lots can avoid charging at an extremely low temperature, which is conducive to improving the activity of power battery, reducing endurance mileage loss and improving charging efficiency.

四、 保养车辆

IV. Vehicle Maintenance

1、 车辆保养要求

1. Vehicle maintenance requirements

1.1 安全须知

1.1 Safety instructions

- 对您的车辆进行任何检查或维护时，务必小心以降低人身伤害的风险或损坏车辆的风险，务必始终遵守以下安全注意事项：
- When performing any inspection or maintenance on your vehicle, be careful to reduce the risk of personal injury or damage to the vehicle. Always observe the following safety precautions:
- 关闭点火并拔下钥匙，特殊程序要求除外。
- Turn off the ignition and remove the key, unless required by special procedures.
- 点火开关打到"ON（开启）"位置时，切勿碰触电线或组件。切记蓄电池和车辆电线承载着可能导致人身伤害的高电流或高电压。切勿造成线路短路。
- Do not touch wires or components when the ignition switch is turned to "ON" position. Remember that the battery and vehicle wires carry high current or voltage that may cause personal injury. Do not cause a short circuit.
- 多数用于机动车辆的液体为有毒液体，切勿品尝或与皮肤或眼睛接触，这些液体包括蓄电池酸液、防冻液、制动液、动力转向液、洗涤液、润滑油、制冷剂等。如果需要加注，请佩戴保护手套。务必遵守标签和容器上的所有说明。在车上或车下工作时，如果可能接触飞溅或掉落的物体、喷洒出的液体等时，请使用眼部保护装置。
- Most of the liquids used in motor vehicles are toxic. Do not taste or contact them with skin or eyes. These liquids include battery acid, antifreeze, brake fluid, power steering fluid, washing fluid, lubricating oil, refrigerant, etc. Wear protective gloves if refilling is required. Be sure to follow all instructions on labels and containers. When working on or under the vehicle, please use eye protection if there is a possibility of contact with splashing or falling objects, sprayed liquids, etc.
- 请确保儿童和宠物远离车辆。切勿允许任何人待在车内（根据您的指示在车上工作的人除外）。确保儿童远离液体和润滑脂。
- Please keep children and pets away from the vehicle. Never allow anyone to stay in the vehicle (except those working on the vehicle according to your instructions). Keep children away from fluids and grease.
- 确保明火远离蓄电池区域，切勿在这些区域和部件附近吸烟。
- Keep open flame away from the battery area and do not smoke near these areas and components.

1.2 常规检查

1.2 Routine inspection

在您驾驶车辆之前或之后，应进行相关部件和功能的检查。

Before or after you drive the vehicle, check relevant components and functions.

1.2.1 出车前检查的项目

1.2.1 Inspection items before driving

- 检查车灯（确保所有透镜清洁）、喇叭、组合仪表、警告灯和指示灯、玻璃刮水器和洗涤器的功能是否正常。
- Check whether the lights (make sure all lenses are clean), horn, instrument cluster, warning light and indicator, windshield wiper and washer function normally.
- 确认安全带是否完好。
- Confirm whether the seat belt is in good condition.
- 检查行车制动器和驻车制动器是否良好。
- Check whether the service brake and parking brake are in good condition.
- 检查车辆是否有漏水、漏油、漏气、漏电以及其它泄露的现象。
- Check the vehicle for water leakage, oil leakage, air leakage, electric leakage and other leaks.

- 检查轮胎的状态和气压是否正常。
- Check whether the tire condition and air pressure are normal.

1.2.2 开车后立即检查的项目
1.2.2 Items to be checked immediately after driving

- 转向装置是否灵活可靠。
- Check whether the steering gear is flexible and reliable.
- 在干燥良好的路面上，检查行车制动器和驻车制动器的制动效果是否良好。
- On a dry road surface, check whether the braking effect of the service brake and parking brake is good.

1.2.3 每周检查或长途行驶之前的检查
1.2.3 Weekly inspection or inspection before long-distance driving

- 检查液位/加注液体。
- Check the fluid level/refill the fluid.
- 检查冷却液。
- Check the coolant.
- 检查风窗玻璃洗涤液。
- Check the windshield washer fluid.
- 检查动力转向液和制动液。
- Check the power steering fluid and brake fluid.
- 检查蓄电池液面。
- Check the battery fluid level.
- 检查所有轮胎的状况及压力（包括备胎）。
- Check the condition and pressure of all tires (including spare tire).
- 检查并操作空调系统。
- Check and operate the A/C system.
- 检查随车工具。
- Check the on-board tools.

1.3 定期维护
1.3 Regular maintenance

对车辆进行定期维护将有利于您的出行安全、车辆的使用寿命和其他基本性能，必须切记确保车辆安全且适于道路行驶的责任最终在于您自己(车主/操作人员）。

Regular maintenance of the vehicle will benefit your travel safety, service life and other basic performance. It must be remembered that the responsibility for ensuring that the vehicle is safe and roadworthy ultimately lies with you (the owner/operator).

《潍柴欧睿产品保修保养手册》规定了需要进行的维护以及进行维护的间隔时间，以便正确维护您的车辆。请按照手册上的规定，到本公司授权服务商对车辆进行定期维护。

The "Weichai Euromonitor Product Warranty and Maintenance Manual" stipulates the required maintenance and maintenance intervals in order to properly maintain your vehicle. Please go to our authorized service provider for regular maintenance of the vehicle as specified in this manual.

按照规定的要求对您的车辆进行定期维护将确保您的最大利益。

Regular maintenance of your vehicle in accordance with the prescribed requirements will ensure your best interests.

因本公司授权服务商具有合格资质的工作人员、所需的设备以及预先制定的维护计划，可以为车辆提供最可靠的服务，所以建议到本公司授权服务商处进行定期维护。

Our authorized service providers have qualified staff, the necessary equipment, and pre-established maintenance plans to provide the most reliable service for your vehicle. Therefore, it is recommended to have your vehicle regularly maintained at our authorized service providers.

恶劣工况：

Severe working conditions:

经常在恶劣工况下使用车辆时，建议缩短维护的间隔时间。请按照《潍柴欧睿产品保修保养手册》上的规定，到本公司授权服务商处对车辆进行定期维护。

When the vehicle is often used under severe conditions, the maintenance interval can be shortened. Please go to our authorized service provider for regular maintenance of the vehicle in accordance with the provisions of Weichai Euromonitor Product Warranty and Maintenance Manual.

2、 车辆外部保养

2. Vehicle exterior maintenance

2.1 清洗车辆

2.1 Vehicle washing

经常洗车和打蜡处理是保护车辆免受环境影响的最好方法。

Frequent vehicle washing and waxing are the best ways to protect vehicles from the environment.

多长时间洗车或打蜡取决于您车辆的使用频率、停车条件、季节、天气条件和环境影响等等。

How often you should wash or wax your vehicle depends on how frequently you use it, parking conditions, seasons, weather, and environmental factors.

鸟粪、昆虫残留物、树脂、道路和工业灰尘、漆等在车顶上沉积时间越长，它们的损害作用越大，请及时清除漆面上看起来无害但实际上有腐蚀性的物体。若不及时清除， 将可能永久性的留下染斑或破坏。

The longer bird droppings, insect residue, tree sap, road and industrial dust, paint, etc. remain on the surface of the vehicle, the greater the damage they can cause. Please promptly remove substances that may appear harmless but are actually corrosive from the vehicle's paint surface. If it is not removed in time, permanent staining or damage may be left.

以下几点有助于车辆的保值：

The following points help to maintain the value of the vehicle:

- 应使用冷水或温水清洗车辆。在极度寒冷条件下，热水可能造成车漆损伤。
- Wash the vehicle with cold or warm water. Under extremely cold conditions, hot water may cause vehicle paint damage.
- 天热时禁止在强烈的阳光直射下洗车。
- Do not wash the vehicle in strong direct sunlight when it is hot.
- 使用车辆专用的清洁剂去除车身上的油脂和焦油斑点，在车身未干时，使用软海绵和含有洗车精的适量清水清洗漆面。彻底冲洗，并用麂皮擦干。
- Remove grease and tar spots on the vehicle body with a special detergent for vehicles. While the body is still wet, use a soft sponge and an appropriate amount of clean water with car shampoo to clean the painted surface. Rinse thoroughly and dry with suede.
- 使用软管清洗车辆时，禁止将水流直接喷向车窗、车门或通过车轮的缝隙喷到制动部件上。
- When cleaning the vehicle with a hose, it is forbidden to spray water directly onto windows and doors or onto brake components through gaps in wheels.
- 清洗后，应检查漆面是否有损坏和石屑，必要时进行补漆，偶尔使用抛光蜡以保护车漆表面。
- After cleaning, check the paint surface for damage and stone chips. If necessary, touch up the paint and occasionally use polishing wax to protect the paint surface.
- 使用高压清洗设备时应让喷水器不断移动。不要直接清洗散热器、门隙、密封件、电气组件或与其相连的部件。
- Keep the water sprayer moving when using high-pressure cleaning equipment. Do not clean the radiator, door gap, seals, electrical components or parts connected to them directly.

⚠ *清洗车辆后首次驾驶时，请轻轻踩下制动数次，以消除制动盘上的水分。*

⚠ *When driving for the first time after cleaning the vehicle, please gently depress the brake pedal several times to eliminate water on the brake disc.*

- 请小心清洗轮胎。请勿使用高压喷嘴，因为它有可能损坏轮胎。若发现任何损伤情况，请更换轮胎。
- Please clean the tires carefully. Do not use a high-pressure nozzle because it may damage the tire. If any of the conditions is found, replace the tire.
- 请勿使用蒸汽清理车底、轮拱罩或变速箱部分，因为这会破坏保护蜡层。
- Do not use steam to clean the vehicle bottom, wheel arch cover or transmission as this will damage the protective wax layer.

2.2 车底防腐蚀

2.2 Underbody anti-corrosion

您车辆的车底出厂经过防腐蚀处理。应定期检查车底防腐蚀。

The underbody of your vehicle has been given anti-

corrosion treatment. The underbody anti-corrosion should be checked regularly.

可使用喷水器清洗车辆底部堆积的尘土或泥浆。如曾行驶在使用盐来防冻的道路上，一定要彻底清洗汽车底部。

You can use a sprayer to clean the dust or mud accumulated on the underbody. If the vehicle has been driven on a road where salt is used to prevent freezing, be sure to thoroughly clean the underbody.

2.3 车门密封件
2.3 Door seals

为防橡胶车门密封件在寒冷的天气中冻结，请使用橡胶保养产品或硅胶喷剂来保护它。

To prevent the rubber door seal from freezing in cold weather, please use a rubber maintenance product or silicone spray to protect it.

2.4 车窗玻璃
2.4 Window glass

- 应时常使用玻璃清洁剂清洗风窗玻璃。
- Frequently clean the windshield with glass cleaner.
- 不得用热水清除玻璃或倒车镜上的冰雪，否则玻璃有可能裂开。车辆的玻璃和倒车镜上的雪最好手工除去。
- Do not use hot water to remove ice and snow from the glass or reversing mirror, otherwise the glass may crack. It is better to remove snow from the vehicle glass and rearview mirror by hand.
- 橡胶、油、油脂或硅酮残留物可以用玻璃清洁剂或硅酮清洁剂清除。
- Rubber, oil, grease or silicone residues can be removed with glass cleaner or silica gel cleaner.

2.5 车轮
2.5 Wheels

车轮和车轮饰板在定期洗车时要同时清洗，防止制动细磨粒、脏物或散洒的盐固结在上面。顽固附着的制动细磨料，可以用工业灰尘去除剂清除。损伤的防护漆在生锈之前要修补好。

When washing the vehicle regularly, the wheels and trims should be cleaned at the same time to prevent brake fine abrasive particles, dirt, or scattered salt from solidifying on the surface. Hard adhering brake fine abrasives can be removed with an industrial dust remover. Damaged protective paint shall be repaired before rusting.

2.6 底盘
2.6 Chassis

汽车底盘在行驶过程中防护层受到损伤不能避免，建议定期检查汽车底盘，如有必要，进行修理。

It is inevitable that the protective layer of the vehicle chassis will be damaged during driving. Therefore, it is recommended to check the vehicle chassis regularly and repair it if necessary.

警告：

Warning:

避免承载超过车辆规定的最大总载荷及前后轴荷，超载有带来底盘部件断裂的风险，从而引发交通事故，造成人身财产损失。

Avoid bearing the maximum total load and front and rear axle loads exceeding those specified for the vehicle. Overload may cause breakage of chassis components, resulting in traffic accidents and personal and property losses.

3、 车辆内部保养
3. Vehicle interior maintenance

3.1 座椅及内饰
3.1 Seat and interior trim

应时常使用真空吸尘器或软毛刷清除纤维上堆积的灰尘及刮尘。经常使用干净的抹布擦拭内饰件。一般的内饰浮尘、斑点或污点可使用专门的清洗剂去除。对于皮饰件，请使用专用清洁剂清洁。

Frequently use a vacuum cleaner or a soft brush to remove dust and debris accumulated on fibers. Wipe the interior trims with a clean cloth frequently. Common dust, spots, or stains on the interior can be removed with a specialized cleaning agent. For leather trims, please clean with special cleaner.

注意：

Caution:

- *座椅表面若残留有过多水分，会造成皮革硬化，收缩。*
- *If there is too much residual water on the seat surface, it will cause the leather to harden and shrink.*
- *塑料内饰件一般建议用干净的湿布清洁。如果效果不好，可使用不含溶剂的清洗剂。*
- *It is generally recommended to clean the plastic interior trims with a clean wet cloth. If the cleaning effect is not satisfactory, a solvent-free cleaning agent can be used.*
- *切勿使用含溶剂的清洗剂清洁仪表板和安全气囊模块表面。*
- *Do not clean the surface of the dashboard and airbag module with a solvent-containing cleaning agent.*

3.2 安全带

3.2 Seat belt

定期检查安全带带子是否有擦伤或磨损迹象，并特别留意固定点和调节器。

Check the seat belt strap regularly for signs of scratches or wear, and pay special attention to anchorages and adjusters.

使用温水和中性肥皂通过海绵清洗安全带；可以进行自然干燥，切勿直接加热或暴露在太阳光照下进行干燥。勿让水进入伸缩机构。绝不要给安全带漂白或染色，因为这样做可能会降低其强度。

Wash the seat belt with warm water and neutral soap using a sponge; it can be dried naturally. Do not directly heat or dry under sunlight. Do not allow water to enter the telescopic mechanism. Never bleach or dye the seat belt, as this may reduce its strength.

注意：

Caution:

- *不要尝试以任何方法修复伸缩装置或锁扣机构，也不要改动安全带。如果安全带在出现事故时拉紧过，应至本公司授权服务商处更换并检查固定点。*
- *Do not try to repair the telescopic device or buckle mechanism by any means, and do not change the seat belt. If the seat belt has been locked or pretensioned during an accident, please go to our authorized service provider to have the seat belt replaced and the anchorage points inspected.*
- *安全带不得拆下清洗。*
- *Do not remove the seat belt for cleaning.*

4、 检查电动机舱

4. Motor compartment inspection

4.1 电动机舱概览图

4.1 Motor compartment overview

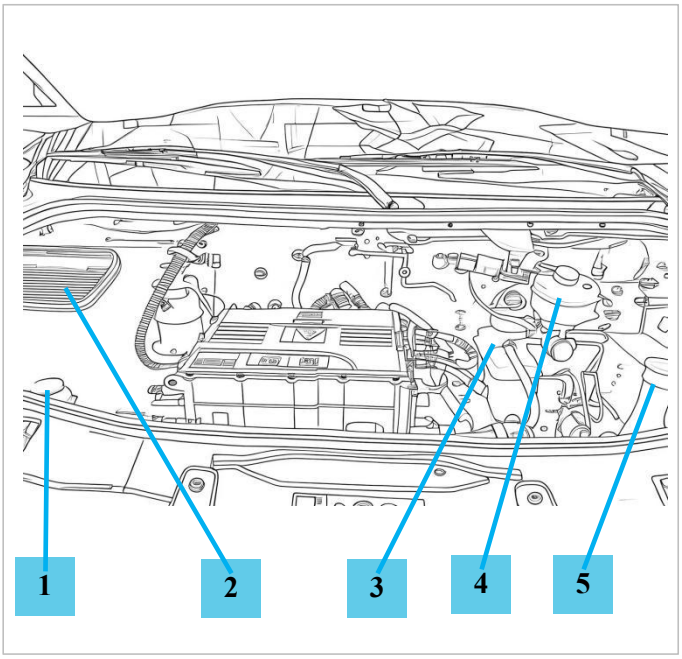

1-转向油壶 2-空调滤清器 3-膨胀水壶（内装冷却液） 4-制动液贮液罐 5-洗涤液贮液罐

1-Steering oil reservoir 2-Air conditioning filter 3-Expansion tank (with coolant inside) 4-Brake fluid reservoir 5-Washing fluid reservoir

4.2 电动机舱清洁

4.2 Motor compartment cleaning

落在前挡风玻璃下边缘集水槽中的树叶、杂物等应及时清理掉。这样可避免出水口堵塞，防止异物经过空调通风设备进入汽车内部。

Leaves and sundries falling in the catch basin at the lower edge of front windshield shall be removed in time. In

this way, the water outlet can be prevented from being blocked and foreign matters can be prevented from entering the vehicle through A/C and ventilation equipment.

在电动机舱内进行操作时，例如检查和补注工作液体，可能会发生烫伤和其它伤害，并存在事故和失火危险。在加注工作液体时，必须保证互不混淆，否则会产生严重的功能故障。

When operating in the engine compartment, such as checking and filling the working fluid, scalds and other injuries may occur and there is a risk of accidents and fire. When filling the working fluids, it must be ensured that they are not mixed up; otherwise, serious functional failures may occur.

机舱中的电机控制器和高压配电箱等为高压 零部件，请注意高压警告标签，切勿触碰。如需清洁，请联系潍柴(扬州)亚星新能源商用车授权服务店进行处理。

The motor controller and high voltage distribution box in the motor compartment are high-voltage components. Please pay attention to the high-voltage warning labels and do not touch them. If cleaning is required, please contact the authorized service provider of Weichai (Yangzhou) Yaxing New Energy Commercial Vehicle Co., Ltd. for handling.

注意：

Caution:

在维修保养电动机舱部件之前，请务必注意本章节的各项相关说明。

Read the relevant instructions in this chapter before repairing and maintaining motor compartment components.

4.3 冷却液

4.3 Coolant

规格正确的冷却液不仅能保护电动机免遭冰冻损害，还能全年保护电机免遭腐蚀。如果未添加规格正确的冷却液，请勿驾驶汽车。

Coolant of the correct specification can not only protect the engine from damage caused by freezing, but also provide year-round protection against corrosion. Do not drive without coolant of correct specification.

冷却系统中的液体必须按规定间隔时间排出、冲洗，并重新加注合适份量的防冻液。

The liquid in the cooling system must be drained and flushed at specified intervals, and appropriate amount of antifreeze shall be refilled.

4.3.1 检查冷却液

4.3.1 Check the coolant

务必将汽车停在平地，且车辆静止（冷态）的情况下检查冷却液液位。

Be sure to park the vehicle on flat ground and check the coolant level when the vehicle is stationary (cold).

液位可在冷却液膨胀壶中看到，正常液位应该位于最高量“MAX”与最低量“MIN”标记之间。

The level can be seen in the coolant expansion tank. The normal level shall be between the "MAX" and "MIN" marks.

如果液位下降到“MIN” 标记处，请清洁冷却液膨胀壶盖周围的部位，并逆时针转动卸下膨胀壶盖。加注指定的冷却液到最高量“MAX”与最低量“MIN”标记之间。拧紧膨胀壶盖，检查冷却系统有无泄漏现象。

If the level drops to the "MIN" mark, please clean the area around the coolant expansion tank cap and remove it by turning counterclockwise. Fill the specified coolant to a level between "MAX" and "MIN" marks. Tighten the expansion tank cap and check whether there is leakage in the cooling system.

4.3.2 添加冷却液

4.3.2 Add coolant

在打开膨胀壶盖之前，必须确认电机、电机控制器以及散热器均已冷却。

Before opening the expansion pot cover, it must be confirmed that the motor, motor controller and radiator have cooled down.

1、确认电机、电机控制器以及散热器均已冷却。

1. Confirm that the motor, motor controller and radiator have cooled down.

2、 冷却液的液位应达到膨胀壶上限(MAX)标记与下限(MIN)标记的中间。如果不足，应当添加冷却液。慢慢地细心倒入冷却液，以免冷却液溢出。溢出的冷却液会损坏前机舱内的零部件，需立刻清除所有的溢

液。

2. The coolant level shall be at the midpoint between the upper (MAX) and lower (MIN) marks on the expansion tank. If it is insufficient, add coolant. Slowly and carefully pour in the coolant to prevent it from overflowing. The overflowing coolant will damage the parts in the front motor compartment, so all overflowing fluid shall be removed immediately.

3、 将膨胀壶盖盖上，并用力拧紧

3. Close the expansion tank cap and tighten it firmly.

冷却液有害，切勿吞食。不要让冷却接触到眼睛或皮肤。万一接触到，请立即用大量清水冲洗。

Coolant is harmful and must not be swallowed. Do not allow coolant to come into contact with eyes or skin. In case of contact, rinse immediately with plenty of clean water.

4.3.3 更换冷却液
4.3.3 Replace coolant

应参照定期保养表所推荐的时间与里程数，将冷却液清理干净，然后重新加入新的冷却液，只可添加正确规格防冻冷却液。使用其他规格的冷却液或直接加水，会使得冷却系统发生锈蚀和产生沉淀物。

The coolant should be cleaned up according to the time and mileage recommended in the regular maintenance table, and then new coolant should be added. Only antifreeze coolant of the correct specification can be added. Using coolant of other specifications or adding water directly will cause the cooling system to rust and produce sediment.

排放冷却液的作业要在车底下进行。因此，除非您有足够的知识和工具设备，否则，应该由熟练的技师来完成这项作业。

The coolant shall be discharged under the vehicle. Therefore, unless you have enough knowledge and tools, skilled technicians should be assigned to complete this work.

注意：

Caution:

- 切勿向冷却系统内添加任何防锈剂或其他添加物，添加物可能与冷却液或电动机组件不相容。
- Do not add any rust inhibitor or other additives to the cooling system, because the additives may be incompatible with coolant or motor components.
- 确保使用适用于铝质散热器的优质冷却液。
- Ensure that good quality coolant is used for aluminum radiators.
- 不同品牌和型号的冷却液建议不要混合使用。如果膨胀壶已清空，还应当检查散热器的冷却液液位。
- Do not mix coolants of different brands and models. If the expansion tank is empty, check the radiator for its coolant level.

4.4 制动液
4.4 Brake fluid

4.4.1 检查制动液
4.4.1 Check brake fluid

应定期检查制动液储液罐中的制动液，液面位置应始终位于最高量“MAX”与最低量“MIN”标记之间。行驶中，由于磨损和制动摩擦片的自动调整，液面会轻微下降，这是正常的。

Regularly check the brake fluid in the reservoir. The level should always be between the "MAX" and "MIN" marks. It is normal that the fluid level will drop slightly due to wear and automatic adjustment of brake lining during driving.

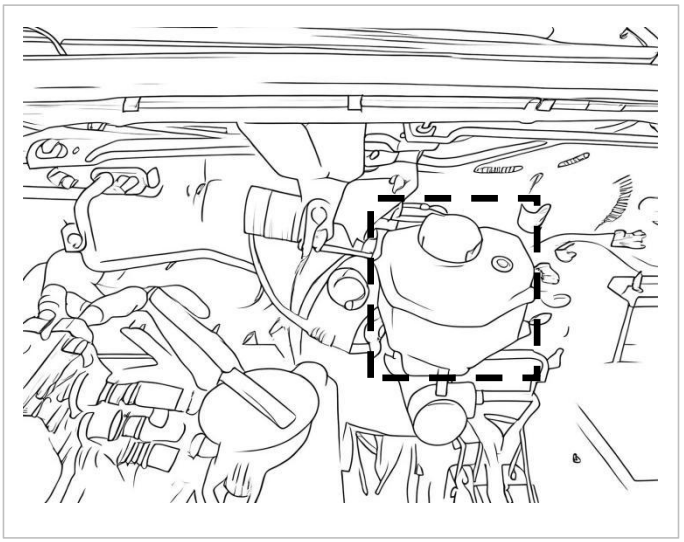

制动液储液罐盖

Brake fluid reservoir cover

4.4.2 更换制动液
4.4.2 Replace brake fluid

使用一段时间后，制动液将会吸收空气中的水份。这会导致沸点降低。如果制动液的沸点过低，在强力制动时（例如下长坡）会在制动系统中形成气穴。这将会严重影响制动效能，车辆的制动距离可能变长，从而增加事故风险。请每 2 年更换一次制动液。

After a period of use, the brake fluid will absorb moisture in the air. This results in a decrease of the boiling point. If the boiling point of brake fluid is too low, air pockets will form in the braking system during strong braking (e.g. downhill and long slope). This will seriously affect the braking efficiency, and the braking distance of the vehicle may become longer, thus increasing the risk of accidents. It is recommended to replace brake fluid once every 2 years.

- 只能加注DOT4或DOT4+的制动液，切勿使用其它类型的制动液；
- Only DOT4 or DOT4+ brake fluid can be filled. Do not use other types of brake fluid;
- 制动液对油漆有腐蚀性。如果制动液接触到漆面，立即用水冲洗；
- Brake fluid is corrosive to paint. If the brake fluid splashes on the paint surface, immediately flush it with clean water;
- 每次更换时，请前往授权服务商处进行更换，更换时必须排空管路内空气。
- Please go to an authorized service provider for replacement every time. The air in the pipeline must be emptied during replacement.

⚠ *制动液对健康有害，不要吞咽制动液。如果误吞制动液，请立即就医。*

⚠ *Do not swallow brake fluid because it is harmful to health. If you swallow brake fluid by mistake, seek medical advice immediately.*

切勿让制动液接触皮肤、眼睛或衣物，如有接触，请立即用大量清水彻底冲洗受污染的部位，必要时立即就医。

Do not let the brake fluid contact with skin, eyes or clothes. In case of contact, please rinse the contaminated part thoroughly with plenty of water immediately and seek medical advice if necessary.

添加制动液时一定要佩戴手套和护目镜。

Be sure to wear gloves and goggles when adding brake fluid.

应将制动液保存在密闭的原容器内，放到儿童接触不到的地方。

Keep the brake fluid in a sealed original container out of reach of children.

处理制动液时要遵守安全规定。

Observe safety regulations when handling brake fluid.

4.5 动力转向液
4.5 Power steering fluid

4.5.1 检查动力转向液
4.5.1 Check power steering fluid

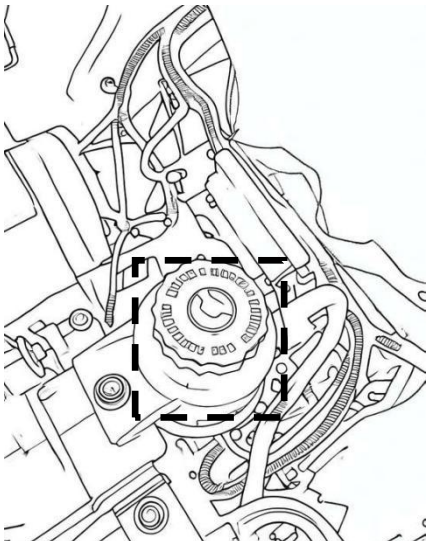

务必将汽车停在平地，系统处于冷态、前轮为直行位置的情况下检查动力转向液液位。动力转向液液位可以在贮液罐上看到，正常液位应该位于最高量“MAX”与最低量“MIN”标记之间。

Be sure to park the vehicle on flat ground and check the power steering fluid level when the system is in a cold state and the front wheels are in a straight position. The power steering fluid level can be seen on the reservoir. The normal level should be between the "MAX" and "MIN" marks.

⚠ *如果液位明显下降，应尽快联系本公司授权服务商检修。*

⚠ *If the liquid level drops significantly, contact our authorized service provider for maintenance as soon as possible.*

4.5.2 加注动力转向液
4.5.2 Fill power steering fluid

如果液位下降到“MIN”标记处，请清洁加液盖周围的部位，并逆时针转动卸下贮液罐盖，加注规定规格的新液至最高量“MAX”与最低量“MIN”标记之间。装上贮液罐盖。

If the fluid level drops to the "MIN" mark, please clean the area around the filler cap and turn it counterclockwise to remove the reservoir cap. Add new fluid of specified specifications until the level is between the "MAX" and "MIN" marks. Install the reservoir cap.

⚠ *务必使用符合 ATF-DEXRON Ⅲ规格的液体。*

⚠ *Be sure to use fluids that meet ATF-DEXRON III specifications.*

注意:

Caution:

切勿过量加注。

Do not overfill.

切勿让灰尘进入动力转向液贮液罐。

Do not allow dust to enter the power steering fluid reservoir.

如果在动力转向液贮液罐内液体不足的情况下操作汽车，可能会损坏动力转向装置。

If the vehicle is operated with insufficient fluid in the power steering fluid reservoir, the power steering device may be damaged.

4.6 洗涤液
4.6 Washer fluid

⚠ *在洗涤系统无法工作的情况下驾驶汽车是一种危险行为，驾驶之前请务必检查。*

⚠ *It is dangerous to drive a vehicle when the washer system cannot work. Please check the washer system before driving.*

4.6.1 检查和加注洗涤液
4.6.1 Check and fill washer fluid

挡风玻璃洗涤液贮液罐位于机舱内。如需加注，请提起加液盖前部添加洗涤液，然后盖好加液盖。洗涤液的规格请参阅“技术数据-技术参数-主要油液参数"。

The windshield washer fluid reservoir is located in the engine compartment. If you need to add washer fluid, lift the front part of the reservoir cap, add the washer fluid, and then close the cap. Please refer to "Technical Data - Technical Parameters - Main Fluid Parameters" for the specifications of the washer fluid.

⚠ *不要使用不符合要求的洗涤液。切勿使用自来水，自来水中的矿物质易堵塞挡风玻璃洗涤液管路或喷嘴。*

⚠ *Do not use washer fluid that does not meet the requirements. Do not use tap water, because minerals in the tap water are prone to block the windshield washer fluid pipeline or nozzle.*

4.6.2 洗涤器喷嘴
4.6.2 Washer nozzle

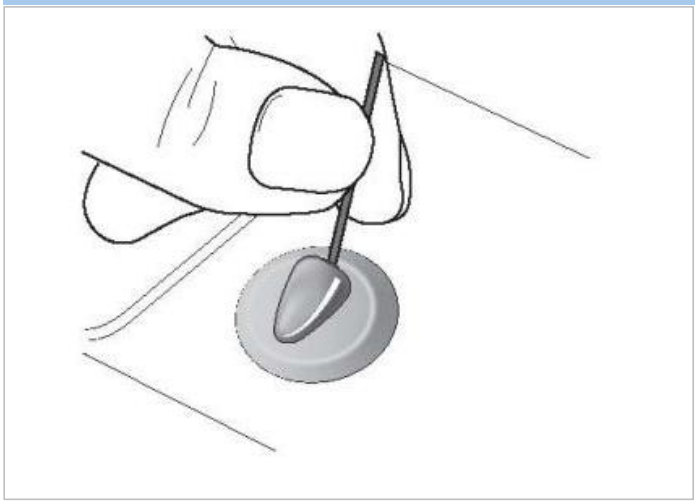

在对喷嘴调整或清洁之前，请确保洗涤器贮液罐已加满。如果喷嘴堵塞，请使用细线或细针小心清理。

Before adjusting or cleaning the nozzle, make sure that the washer reservoir is full. If the nozzle is blocked, carefully clean it with a fine wire or needle.

洗涤器喷嘴方向在制造厂已经设置好，一般不需要调整。如果确实需要调整，请将一根细针小心插入喷嘴孔中，使用它来重新定位喷嘴，以使喷射方向朝向风窗玻璃中部。

The direction of the washer nozzle has been set by the manufacturer and generally does not need to be adjusted. If adjustment is indeed necessary, carefully insert a fine needle into the nozzle hole and use it to reposition the nozzle so that the spray direction faces the middle of the windshield.

4.7 蓄电池
4.7 Battery

注意：

Caution:

- *电池酸液可能会灼伤您，其蒸汽可能会点燃。这样会对您造成严重伤害，并且会损坏汽车。*
- *Battery acid may burn you and its vapors may ignite. This will cause serious injury to you and damage to the vehicle.*
- *不要在蓄电池附近使用明火、造成火花，也不要吸烟。*
- *Do not use open flames, create sparks, or smoke near the battery.*
- *不要让蓄电池酸液接触到车身、布饰或汽车漆面的任何部位。*
- *Do not allow the battery acid to contact any part of the vehicle body, fabric or painted surface.*
- *蓄电池电解液的腐蚀性极强。在处理蓄电池时，请务必佩戴防护手套和护目镜。*
- *Battery electrolyte is extremely corrosive. Be sure to wear protective gloves and goggles when handling the battery.*
- *切勿让儿童靠近蓄电池。*
- *Be sure to keep children away from the battery.*
- *务必保持蓄电池外壳清洁、干燥。清洁蓄电池连接点，并在端子处涂抹凡士林油。*
- *Be sure to keep the battery case clean and dry. Clean the battery connection points and apply petroleum jelly to the terminals.*

提醒：

Note:

仅安装和原蓄电池同样类型和型号的蓄电池，并由本公司授权的服务商给你拆装蓄电池。

Only install batteries of the same type and model as the original battery, and have the battery removed and installed by our authorized service providers.

4.7.1 蓄电池存放和保养
4.7.1 Storage and maintenance of battery

如果车辆在未来一星期内不会行驶，应断开蓄电池负极电缆，这样可防止蓄电池放电。

If the vehicle will not run in the next week, disconnect the battery negative cable to prevent the battery from discharging.

维修装配蓄电池时应注意轻拿轻放，避免电池液外泄或者爆炸产生安全事故，蓄电池装配前首先检查是否有电。

When repairing and assembling the battery, handle it with care to avoid safety accidents caused by leakage or explosion of battery fluid. Check whether the battery is energized before assembly.

4.7.2 环保说明
4.7.2 Environmental protection instructions

- 电池含有污染物，将电池与生活垃圾一同弃置是违法的，必须将电池单独收集并以环保的方式回收利用。
- Batteries contain pollutants and it is illegal to dispose of batteries together with household waste. Batteries must be collected separately and recycled in an environmentally friendly manner.
- 请以环保的方式弃置电池。将电量耗尽的电池送交具有资质的专业服务中心或专门的废旧电池回收点。
- Dispose of the battery in an environmentally friendly manner. Send the dead battery to a qualified professional service center or special waste battery recycling point.

5、 检查雨刮器片
5. Check wiper blade

5.1 雨刮器片
5.1 Wiper blade

5.1.1 检查
5.1.1 Inspection

检查刮片边缘是否有粗糙或损坏情况，并检查刮片橡胶是否从上到下都很牢固。

Check whether the wiper blade edge is rough or damaged, and whether the wiper rubber is securely attached from top to bottom.

⚠ *橡胶片上如有油脂或其它杂质，可能会造成刮水器无法正常工作，并有可能损坏风窗玻璃。*

⚠ *If there is grease or other impurities on the wiper rubber, the wiper may not work properly and may damage the windshield.*

5.1.2 更换
5.1.2 Replace

更换前的检查与准备

Inspection and preparation before replacement

- **判断更换时机**
- **Determine the timing of replacement**

当雨刮器出现以下情况时需更换：刮水后玻璃残留水痕或条纹、工作时发出异响、橡胶条老化或开裂。

The wiper needs to be replaced when the following conditions occur: residual water marks or stripes on the glass after wiping, abnormal noise during operation, aging or cracking of rubber strips.

- **更换步骤**
- **Replacement steps**

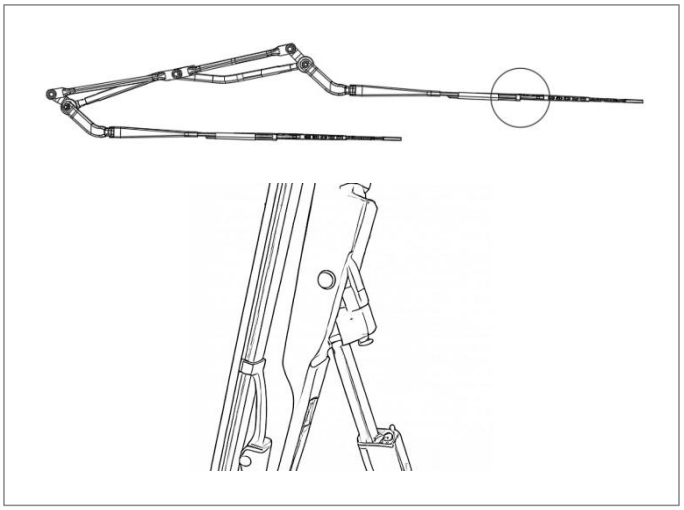

步骤 1：更换准备

Step 1: Preparation for replacement

关闭车辆电源，轻拨雨刮操纵杆使其停留在竖直位置（维护位置）。

Turn off the power supply of the vehicle and gently pull the wiper control lever to make it stay in the vertical position (maintenance position).

若无法自动进入，手动抬起雨刮臂至与挡风玻璃呈 90°角。

If automatic entry is not possible, manually lift the wiper arm to a 90° angle with the windshield.

步骤 2：拆卸旧雨刮器

Step 2: Remove the old wiper

找到雨刮器连接处释放卡扣。

Find the release clip at the wiper connection.

按住释放装置同时沿箭头方向平稳滑出雨刮器

Press and hold the release device while sliding out the wiper smoothly in the direction of the arrow

步骤 3：安装新雨刮器

Step 3: Install a new wiper

对准接口：将新雨刮器接口与雨刮臂对齐，确保卡扣位吻合。

Align the interface: Align the new wiper interface with the wiper arm to ensure that the buckle position matches.

固定安装： 推入雨刮器直至听到“咔嗒”声。

Installation: Push the wiper in until you hear a "click" sound.

轻放雨刮臂：缓慢将雨刮臂复位至挡风玻璃表面。

Gently lower the wiper arm: Slowly reset the wiper arm to the windshield surface.

步骤 4：测试与调试

Step 4: Testing and debugging

启动车辆，喷洒玻璃水并开启雨刮，检查刮水是否均匀、无异响或跳动。

Start the vehicle, spray windshield washer fluid and turn on the wipers to check whether the wiping is even, without abnormal noise or jumping.

若效果不佳，重新检查安装是否牢固或雨刮角度是否贴合玻璃。

If the wiping is not satisfactory, recheck whether the installation is secure or if the wiper angle is flush with the glass.

注意事项

Precautions

1. 操作环境

1. Operational environment

避免在阳光直射下更换，高温易导致橡胶变形。

Avoid replacement in direct sunlight, as high temperatures can easily cause rubber deformation.

清洁挡风玻璃表面污垢后再安装，延长雨刮寿命。

Clean the dirt on the windshield surface before installing it to extend the life of the wiper.

2. 维护建议

2. Maintenance Recommendations

定期清理雨刮片橡胶条上的污垢(可用酒精擦拭)。

Regularly clean the dirt on the wiper blade rubber strip (it can be wiped with alcohol).

冬季避免雨刮器冻在玻璃上，需手动除冰后再启动。

Avoid the wiper from freezing on the glass in winter, and start it after manual deicing.

使用专用玻璃水，避免清水导致橡胶硬化。

Use special windshield washer fluid to avoid rubber hardening caused by clean water.

5.1.3 维护保养
5.1.3 Maintenance

用优质清洁剂或中性洗涤剂清洗，并使用不起毛的干燥软布擦净。

Clean the wiper blade with a high-quality or neutral cleaner, and wipe it clean with a lint-free dry soft cloth.

⚠ *记住挂钩与支架的相对位置，因为稍后需要按相同的方法装配更换刮片。*

⚠ *Remember the relative position of the hook and bracket, as you will need to install the replacement wiper blade in the same way later.*

6、 检查和更换轮胎
6. Check and replace tires

6.1 轮胎压力
6.1 Tire pressure

轮胎必须具有正确的压力才能有效工作，务必始终遵守规定的轮胎压力。

The tire must have the correct pressure to work effectively. Be sure to follow the specified tire pressure.

⚠ ***注意：***

⚠ ***Caution:***

- *当车辆行驶时，轮胎温度和轮胎压力会有所增加。因此，切勿降低热胎的压力。否则，一旦轮胎冷却后，压力将会变得过低。*
- *When the vehicle is running, tire temperature and pressure will increase. Therefore, do not reduce the pressure of the hot tire. Otherwise, the pressure will become too low once the tire cools down.*
- *轮胎压力必须调节到适合车辆的有效载荷。如果轮胎压力过低，可能会使轮胎爆胎，尤其是负载及车速较高时。如果轮胎压力过高，可导致制动距离加长及轮胎抓地能力下降。如果轮胎压力设定不正确，您可能无法控制车辆，从而引发事故，并对自身或他人造成伤害。*
- *The tire pressure must be adjusted to fit the payload of the vehicle. If the tire pressure is too low, it may cause a tire burst, especially when the load and speed are high. If the tire pressure is too high, the braking distance may be prolonged and the grip ability of the tire may decrease. If the tire pressure is set incorrectly, you may not be able to control the vehicle, resulting in an accident and causing injury to yourself or others.*
- *当轮胎处于冷态时，定期检查轮胎的规定压力。应该至少每两周以及在长途行车之前进行一次检查。装载车辆之前，校正轮胎压力。车辆装载完毕后检查轮胎压力，必要时进行校正。*
- *When the tires are in a cold state, regularly check the specified tire pressure. The check shall be carried out at least once every two weeks and before long-distance driving. Correct tire pressure before loading the vehicle. Check the tire pressure after the vehicle is loaded and correct the pressure if necessary.*

如果轮胎压力过低，可能会造成轮胎温度过高、磨损加剧、车辆方向稳定性改变以及燃油消耗量增加。

If the tire pressure is too low, it may cause excessive tire temperature, increased wear and fuel consumption and a change of vehicle direction stability.

如果轮胎压力过高，可能会造成制动距离加长、轮胎抓地能力下降以及磨损加剧。

If the tire pressure is too high, it may cause longer braking distance, reduced grip ability and increased wear.

轮胎气门嘴上的气门嘴帽可以防止湿气和污垢进入气门芯。因此，必须将气门嘴帽拧紧在轮胎气门嘴上。

The cap on the tire valve can prevent moisture and dirt from entering the valve core. Therefore, the cap must be tightened on the tire valve.

如果轮胎压力反复下降，可能是由于外部损坏、胎面或轮胎间（双轮胎）有异物、裂纹、凸起或轮胎气门嘴泄漏造成的。

If the tire pressure drops repeatedly, it may be caused by external damage, foreign matter on the tread or between tires (double tires), cracks, bulges or leakage of tire valve.

6.2 胎面
6.2 Tread

法律规定了最小轮胎花纹深度。您应该遵守有关国家的法规要求。胎面花纹深度越小，车辆的抓地能力和操纵性就越差，特别是在湿滑或冰雪覆盖的路面上。胎面花纹深度不足3毫米时，轮胎在湿滑路面上的抓地能力严重下降。基于安全理由，您应该根据法律规定在达到轮胎安全标记点之前更换轮胎。

The minimum tread depth is specified by law. You should comply with the regulatory requirements of relevant countries. The smaller the tread depth is, the worse the vehicle's grip ability and maneuverability will be, especially on slippery or snow-covered roads. When the tread depth is less than 3 mm, the grip capacity of tires on slippery roads will be seriously reduced. For safety reasons, you should replace the tire before reaching the tire safety marking point according to laws.

事故风险

Accident risk

必须确保有足够的胎面花纹深度。如果轮胎花纹深度不足，遇有大雨或在有雪泥的路面以及高速行驶时，出现水滑现象的风险加剧。胎面无法将附着的水及时甩掉，此时驾驶员可能会失去对车辆的控制，从而引发事故，对驾驶员自身或他人造成伤害。

Sufficient tread depth must be ensured. If the tread depth is insufficient, the risk of hydroplaning will increase during heavy rain, on roads with slush or mud, or when driving at high speed. If the attached water cannot be thrown off from the tread in time, the driver may lose control of the vehicle, resulting in an accident and injury to himself/herself or others.

6.3 轮胎气门嘴
6.3 Tire valve stem

注意：

Caution:

基于安全理由，不同车型请选择与轮胎压力相符的轮胎气门嘴。

For safety reasons, please select tire valve stem compatible with the required tire pressure for different vehicle models.

不能将其它物体 (回流阀等) 拧到轮胎气门嘴上，否则会损坏轮胎气门嘴。

Do not screw other objects (return valve, etc.) onto the tire valve; otherwise, the tire valve will be damaged.

6.4 检查轮胎
6.4 Check tires

定期检查轮胎状况，至少每两周以及长途旅行之前检查一次，检查项目至少包括：

Check the tire condition regularly, at least once every two weeks and before long-distance travel, including at least:

- 外部损坏
- External damage
- 胎面有异物
- Foreign matters on the tread
- 轮胎之间有异物（双轮胎车辆）
- Foreign matters between tires (for double-tired vehicle)
- 有裂纹、凸起
- Cracks and bulges
- 轮胎花纹深度和/或胎面单侧或不均匀磨损。
- Tread pattern depth and/or unilateral or uneven tread wear.

将方向盘朝一侧打死，以便更好地检查前轮内侧，还必须检查后轮胎的胎面内侧。

Turn the steering wheel fully to one side to better check the inner side of the front wheels. You must also check the inner side of the tread of the rear tires.

事故风险

Accident risk

- *请注意裂纹、凸起以及其它损坏都可能导致爆胎，从而可能使您无法控制车辆造成事故并且伤及自身或*

他人。

- *Please note that cracks, bulges and other damages may cause a tire burst, which may make you lose control of the vehicle and cause accidents and injury to yourself or others.*
- *请立即更换损坏的轮胎。*
- *Replace the damaged tire immediately.*

6.5 更换轮胎

6.5 Replace tires

6.5.1 轮胎使用年限

6.5.1 Service life of tires

即使轮胎不经常使用或根本不使用，轮胎也会老化。操作和驾驶安全性会随着轮胎的老化而降低。因此建议按照保养手册要求对轮胎进行维护或更换，这个对于备用轮胎同样有效。

Tires will age even if they are not used frequently or at all. Operating and driving safety will decrease with the aging of tires. Therefore, it is recommended to maintain or replace tires according to the requirements of the maintenance manual; this also applies to the spare tire.

6.5.2 更换车轮及轮胎

6.5.2 Replace wheels and tires

只能装配相同构造及类型的轮胎和车轮。

Only tires and wheels of the same structure and type can be assembled.

只能为车轮装配正确尺寸的轮胎。

Only tires of the correct dimensions can be assembled on the corresponding wheels.

如果仅更换一对轮胎，请先把新轮胎装在后车轮上。

If only one pair of tires is replaced, please install the new tires on the rear wheels first.

事故风险

Accident risk

(1) 只有当前后车轮的尺寸完全相同时才可以对换。如果对换的车轮尺寸不同，车辆的操纵性会发生显著变化，无法再保证操作安全性。

(1) The front and rear wheels can only be swapped if they are exactly the same size. If the dimensions of exchanged wheels are different, the maneuverability of the vehicle will change significantly and operation safety can no longer be guaranteed.

(2) 如果您的车辆配备了轮胎压力监测系统，车轮中会装有电子部件。不要在气门嘴区域使用装配工具，否则可能会损坏电子部件。务必到潍柴（扬州）亚星新能源商用车公司特许服务中心对轮胎进行更换。

(2) If your vehicle is equipped with a tire pressure monitoring system, electronic components will be installed in the wheels. Do not use assembly tools in the valve area; otherwise, electronic components may be damaged. Be sure to go to the franchised service center of Weichai (Yangzhou) Yaxing New Energy Commercial Vehicle Co., Ltd. for tire replacement.

(3) 翻新轮胎未经公司测试，因此不推荐使用。在胎面翻新加工中，以往的损坏并非总是能够被探测到。因此，使用翻新轮胎意味着无法保证达到与使用原厂轮胎相同程度的驾驶安全性。

(3) Retreaded tires have not been tested by the company and are therefore not recommended. Previous damage is not always detectable in tread retreading. Therefore, the use of retreaded tires means that the same degree of driving safety as with original tires cannot be guaranteed.

6.6 轮胎存放

6.6 Tire storage

请将轮胎存放在凉爽、干燥的环境中，最好在阴暗处。

Please store the tires in a cool and dry environment, preferably in dark places.

使轮胎远离机油、油脂和燃油。不要用酸性车轮清洁剂清洗车轮，因为可能会腐蚀车轮螺栓头或车轮螺母。

Keep tires away from oil, grease and fuel. Do not clean the wheel with acidic wheel cleaner, because it may corrode the wheel bolt head or wheel nut.

五、 紧急情况

V. Emergency

1、 路边停车警告

1. Roadside parking warning

1.1 危险警告灯

1.1 Hazard warning light

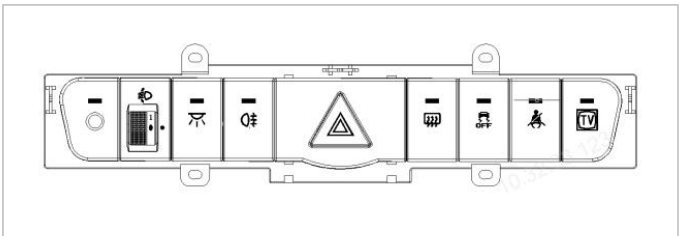

危险警告灯的功能在于警告靠近、急速赶上或试图超越您车辆的其他驾驶员提高注意力。

The function of the hazard warning lights is to alert other drivers who are approaching, rapidly catching up, or attempting to overtake your vehicle to pay extra attention.

当车辆需要紧急维修或暂停于路旁时必须使用危险警告灯。

The hazard warning lights must be used when the vehicle needs emergency maintenance or is parked on the roadside.

不论点火开关位于哪个位置，按下危险警告灯开关时，危险警告灯工作。危险警告灯开关在中央控制台开关板上，当按下此开关后，所有转向信号灯同时闪亮。

No matter which position the ignition switch is in, when the hazard warning light switch is pressed, the hazard warning light will work. The hazard warning light switch is on the central console switch panel. When this switch is pressed, all turn signal lights flash at the same time.

注意：

Caution:

- *不论您车辆是否处于行驶状态，此危险警告灯皆能工作。*
- *This hazard warning light can work regardless of whether your vehicle is in motion.*
- *危险警告灯闪烁时，转向信号灯不工作。*
- *When the hazard warning light flashes, the turn signal does not work.*
- *车辆被拖吊过程中使用危险警告灯时应该特别注意。*
- *Special attention should be paid when using hazard warning lights while the vehicle is being towed.*

1.2 三角警告牌

1.2 Warning triangle

当您驾驶汽车遇到问题要将车停在路边时，您必须在车正后方约 100 米处的路边放置三角警示牌，以警示后面车辆。三角警示牌位于司机门下方。

If you need to stop your vehicle on the roadside due to a problem while driving, you must place a warning triangle about 100 meters behind your vehicle at the roadside to alert vehicles behind you. The warning triangle is located under the driver's door.

2、 驾驶中出现紧急情况

2. Emergency during driving

如果车辆在驾驶中出现电机失速，可采取以下措施：

If the motor stalls during driving, the following measures can be taken:

1、 逐渐减速，保持直线行驶，小心将车辆脱离公路停在安全地区。

1. Gradually slow down while keeping the vehicle in a straight line. Carefully steer the vehicle off the road and park in a safe location.

2、 打开危险警告灯。

2. Turn on the hazard warning lights.

3、 重新启动车辆。如车辆仍不能启动，请与授权服务商联系修理。

3. Restart the vehicle. If the vehicle still cannot be started, please contact an authorized service provider for repair.

3、 车辆行驶异常

3. Abnormal vehicle running

车辆无法行驶或行驶过程中加速感减弱

The vehicle cannot be driven or experiences reduced acceleration while driving.

1、 检查仪表上电机故障灯状态，确保电机无故障。

1. Check the state of the motor fault indicator on the instrument to ensure that there is no fault in the motor.

2、 检查动力电池电量，确定电量是否充足。

2. Check whether the SOC of the traction battery is sufficient.

3、 检查仪表上电池故障灯状态，确保电池无故障。

3. Check the battery fault light status on the instrument to ensure that the battery is not faulty.

4、 检查刹车踏板状态，确保刹车踏板无挤压。

4. Check the brake pedal status to ensure that it is not pressed or stuck.

5、 车辆无法行驶时，请勿高速拖动电机。

5. Do not drag the motor at high speed when the vehicle cannot run.

4、 跨接启动

4. Jump start

4.1 断开蓄电池连接

4.1 Disconnect the battery

进行蓄电池相关作业时，务必穿戴防护手套及护目镜。

When performing battery-related operations, be sure to wear protective gloves and goggles.

请勿在蓄电池区域使用明火、造成火花或吸烟，否则会造成您受重伤及车辆受损。

Do not use open flame, cause sparks or smoke in the battery area; otherwise, you will be seriously injured and the vehicle will be damaged.

如欲断开蓄电池连接，请务必先断开负极 (-) 接地端，然后才是正极 (+)。连接蓄电池时，请先安装并紧固正极电缆 (+)，然后才是负极 (-) 电缆，并用凡士林油盖住端子。

To disconnect the battery, be sure to disconnect the negative (-) ground terminal first and then the positive (+) ground terminal. When connecting the battery, install and tighten the positive cable (+) first, then the negative cable (-), and cover the terminal with petroleum jelly.

注意：

Caution:

断开蓄电池之前，务必关闭发动机及全部电气设备，断开时，请勿让端子接触到车身的金属部件。否则产生的短路可能造成电火花。

Before disconnecting the battery, be sure to turn off the engine and all electrical equipment. During disconnecting, the terminals cannot touch the metal parts of the vehicle body. Otherwise, the resultant short circuit may cause electric spark.

若正负极连接电缆反向，将造成电气系统损坏。

If the positive and negative cables are connected reversely, the electrical system will be damaged.

4.2 跨接启动

4.2 Jump start

决不允许推动或者牵引车辆启动。保证两个蓄电池的额定电压相同（12 V），且跨接电缆是被认可的用于12V 汽车蓄电池的电缆。

Never push or tow the vehicle to start. Make sure that the rated voltage of both batteries is the same (12 V), and the jumper cable is the one approved for 12 V automobile battery.

4.2.1 跨接

4.2.1 Jump

- 使两车尽量靠近。

- Keep the two vehicles as close as possible.
- 关闭电机或发动机及全部电气设备。
- Turn off the motor or engine and all electrical equipment.
- 用红色的跨接电缆连接两个蓄电池的正极（+）。
- Connect the positive poles (+) of two batteries with red jumper cables.
- 把黑色的跨接电缆从供电蓄电池的负极（-）连接到需充电蓄电池车辆的接地点（不是负极）。
- Connect the black jumper cable from the negative pole (-) of the power supply battery to the grounding point (not the negative pole) of the vehicle requiring charging.
- 确定各处连接装置均接触良好。
- Make sure that all connecting devices are in good contact.
- 检查跨接电缆有无接触到任何电机或发动机启动时的运动部件。
- Check whether the jumper cable contacts any moving parts when the motor or engine is started.

检查两部车辆的驻车制动手柄是否合上，且变速杆是否处在空挡。

Check whether the parking brake handles of both vehicles are engaged and whether their gearshift levers are in the neutral position.

4.2.2 启动
4.2.2 Start

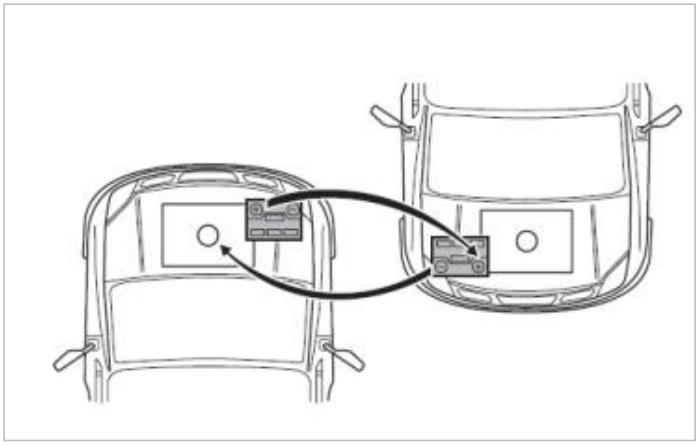

- 启动供电蓄电池车辆，并让其怠速运行几分钟。
- Start the battery-powered vehicle and let it idle for a few minutes.
- 启动需供电蓄电池的车辆。
- Start the vehicle with the discharged battery.
- 车辆上高压后，保持运行两分钟以上。
- After the vehicle is powered up to high voltage, keep it running for more than two minutes.

4.2.3 断开
4.2.3 Disconnect

- 关闭供电车辆发动机或电机。
- Turn off the engine or motor of the power supply vehicle.
- 确定导线端不会相互接触，且断开中不会接触到发动机的任何运动部件。
- Make sure that the wire ends do not touch each other and that no moving parts of the engine will be contacted during disconnection.
- 拆卸跨界电缆。拆卸的过程和连接的过程相反。
- Remove the jumper cable. The removal process is the opposite of the connection process.

注意：

Caution:

在跨接电缆拆卸前禁止打开被启动车辆的任何电器。

Do not turn on any electrical appliance of the started vehicle before removing the jumper cable.

5、 车辆无法启动
5. Vehicle start failure

电池状态异常

Abnormal battery state

电池状态异常，会直接影响电动车辆启动异常，导致无法启动的情况。

Abnormal battery state will directly affect the starting of electric vehicles, resulting in failure to start.

电池状态排查

Battery state troubleshooting

⚠ *务必穿戴绝缘手套，以防高压触电。*

⚠ *Always wear insulating gloves to prevent high voltage electric shock.*

排查按如下方式进行：

Troubleshooting shall be carried out as follows:

1、 检查仪表上电池状态信息是否正常。

1. Check whether the battery state information on the instrument is normal.

2、 检查仪表右下侧“电池故障警示灯”是否点亮。

2. Check whether the "battery fault warning indicator" on the lower right side of the instrument is on.

3、 检查低压信号线路电池BMS的连接是否正常。

3. Check whether the connection of the low-voltage signal line battery BMS is normal.

检查两路 CAN 线电压、阻值是否正常。

Check whether the voltage and resistance of the two CAN buses are normal.

注意：

Caution:

若组合仪表右下侧的“电池故障警示灯”在驾驶中亮起，请尽快在安全地点停车，关闭钥匙并进行排查。

If the "battery fault warning indicator" on the lower right side of the instrument cluster illuminates during driving, please stop the vehicle in a safe place as soon as possible, turn off the key switch and troubleshoot.

6、 更换轮胎

6. Replace tires

6.1 备胎

6.1 Spare tire

备用轮胎位于车辆后部下方的备胎架内。定期检查备用轮胎，查看其是否稳固以及轮胎压力是否正确。取出备胎的操作如下：

The spare tire is placed in the spare tire carrier under the rear part of the vehicle. Check the spare tire regularly to see if it is fixed stably and whether the tire pressure is correct. Remove the spare tire as follows:

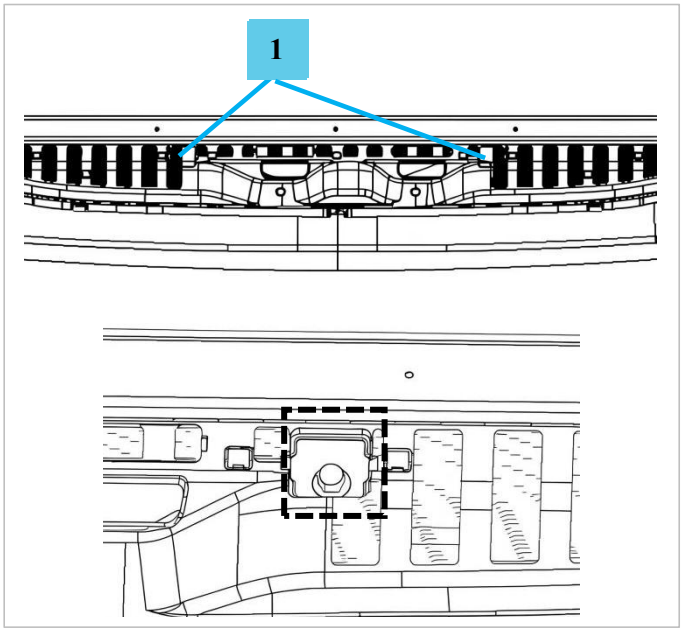

1、 开启尾门。

1. Open the tailgate.

2、 将螺丝刀插入凹槽，然后撬起护盖 1。

2. Insert a screwdriver into the groove and pry up the cover 1.

3、 使用车用工具套件中的套筒，逆时针拧下露出来的螺栓约 20 圈。

3. Unscrew the exposed bolt counterclockwise for about 20 turns with a socket wrench in the vehicle tool kit.

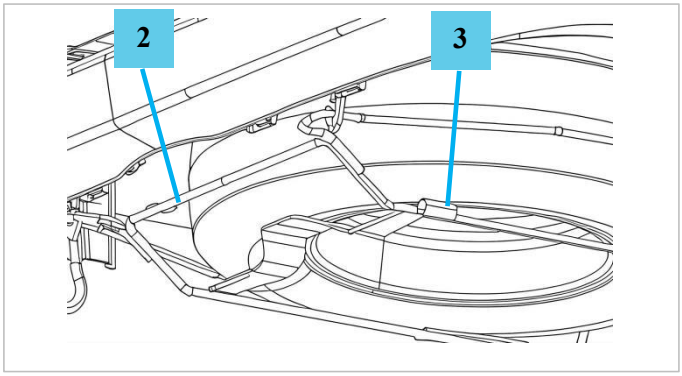

4、 稍稍抬起备胎架 2，并解开左侧保险闩。

4. Slightly lift the spare tire carrier 2 and release the left safety latch.

5、 将千斤顶摇杆插入备胎架上的套筒 3 中。

5. Insert a jack lever into sleeve 3 on the spare tire carrier.

6、 用摇杆抬起备胎架，解开右侧保险闩。

6. Lift the spare tire carrier with the lever and unlock the right safety latch.

7、 将备胎架慢慢放到地上。

7. Slowly lower the spare tire carrier to the ground.

8、 稍稍提起备胎架，将摇杆从套筒中拉出。

8. Slightly lift the spare tire carrier and pull the lever out of the sleeve.

9、 使用摇杆将备用轮胎撬离备胎架。

9. Use the lever to pry the spare tire off the spare tire carrier.

10、 小心地从备胎架上取下备用轮胎。

10. Carefully remove the spare tire from the spare tire carrier.

注意：

Caution:

取出备胎时注意不要夹到手指。

Be careful not to pinch your fingers when taking out the spare tire.

6.2 千斤顶和随车工具

6.2 Jack and on-board tools

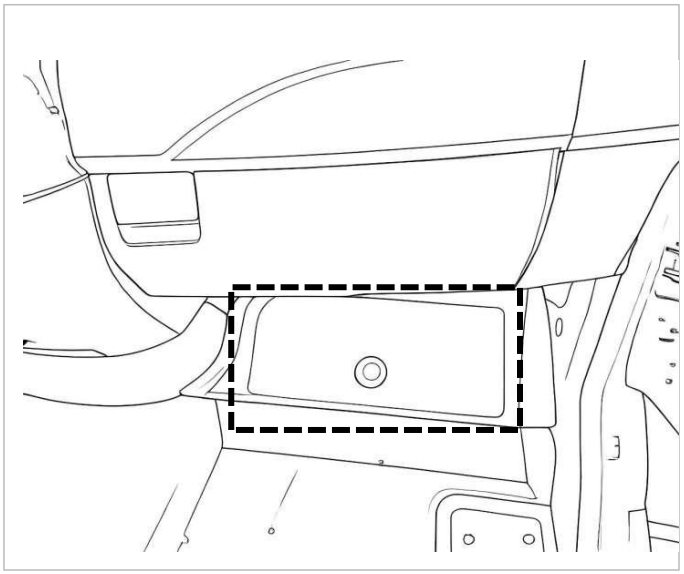

千斤顶和随车工具包放在副驾驶员脚下的工具箱盖板下面。拧开盖板上的梅花头螺栓，即可打开盖板，便可取出千斤顶及随车工具。

The jack and the on-board tool kit are placed under the toolbox cover plate at the front passenger's foot. Unscrew the plum head bolts on the cover plate to open the cover plate and take out the jack and on-board tools.

更换轮胎、车辆停置

Tire replacement and vehicle stopping

⚠ *请选择坚固的、水平的、不会妨碍交通的、且您本人不会有交通危险的地方停放车辆。*

⚠ *Please park your vehicle in a sturdy, level place that will not hinder traffic and where you will not be a traffic hazard.*

- 若您在公共道路上，请打开危险警告灯，并放置三角警示牌。
- If you are on a public road, please turn on the hazard warning light and place a warning triangle.
- 请使用合适的车轮塞固定住其它车轮。
- Please use appropriate wheel chocks to secure the other wheels.
- 若您位于较滑的地方，请勿使用千斤顶。若条件不适合使用千斤顶，或者您对安全完成任务的信心不足，请呼叫帮助。
- Do not use the jack if you are in a slippery place. If the conditions are not suitable for using a jack, or if you are not confident enough to complete this work safely, please call for help.
- 确保前轮正指前方。
- Make sure that the front wheels are right ahead.
- 关闭电动机时，拉起驻车制动手柄，并将挡位调到 N 挡位置。
- When turning off the motor, pull up the parking brake and shift to N position.

6.3 放置千斤顶

6.3 Place the jack

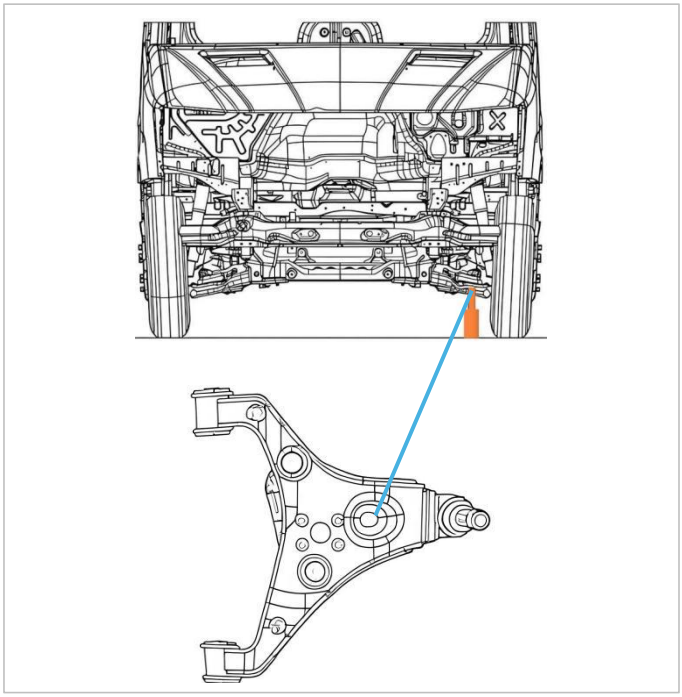

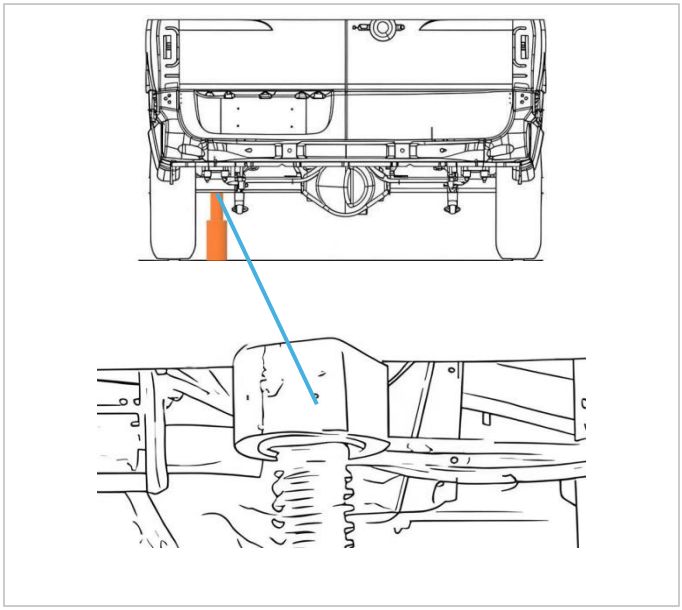

柴油车，圆弧顶头，圆弧面与桥管相贴合，防止滑动。

For diesel vehicles, ensure that the arc-shaped head and arc-shaped surface fit closely with the axle tube to prevent slipping.

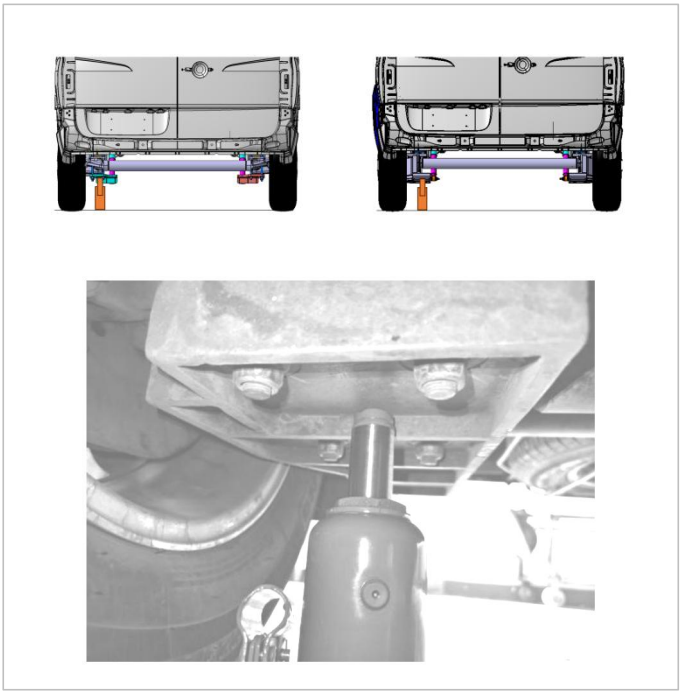

电驱桥，千斤顶顶在 U 型螺栓底板中心位置。

Electric drive axle, the jack is placed in the center of the U-bolt base plate.

⚠ ***注意：***

⚠***Caution:***

- 仅可在指定的顶起点使用千斤顶。
- Use jacks only at the designated jacking point.
- 顶起高度不应超过更换轮胎所必须的高度（例如高出地面不超过 30 厘米）。
- The jacking height shall not exceed the height necessary for replacing tire (for example, not more than 30 cm above the ground).
- 使用千斤顶前，请先确保乘员已离开车辆。
- Before using the jack, please make sure that passengers have left the vehicle.
- 举升时，必须使千斤顶垂直于车身。
- During lifting, the jack must be perpendicular to the vehicle body.

6.4 换上备胎

6.4 Install the spare tire

⚠ ***注意：***

⚠***Caution:***

- 举升时切勿发动车辆。切勿走到举升起的车辆下面。

- Do not start the vehicle when lifting. Never go under the lifted vehicle.

- 拆下车轮螺栓前，请确定车辆稳定且不会滑动或移动。

- Before removing the wheel bolts, make sure that the vehicle is stable and will not slide or move.

- 需使用扭力扳手精确地检查车轮螺栓拧紧扭矩，并在更换车轮后尽快检查胎压。

- Use a torque wrench to accurately check the tightening torque of wheel bolts, and check the tire pressure as soon as possible after replacing wheels.

- 一定要将换下的车轮、千斤顶及随车工具包收至指定位置。若随意放置或放置不当，则它们可能在冲击或急刹时移动，造成破坏或人身伤害。

- Be sure to put the replaced wheels, jacks and on-board tool kits in designated positions. If they are placed at will or improperly, they may move during impact or sudden braking, causing damage or personal injury.

具体更换步骤如下：

The specific replacing steps are as follows:

1、 拆下备胎。

1. Remove the spare tire.

2、 检查千斤顶是否仍然垂直于顶起点；如有需要请更换位置。

2. Check that the jack is still perpendicular to the jacking point; change position if necessary.

3、 小心的凿下（勿损坏漆面）被换车轮的饰件。

3. Carefully pry off the trim from the wheel to be replaced (do not damage the paint).

4、 使用随车工具包中的套筒扳手，按逆时针方向拧松车轮固定螺栓。

4. Use the socket wrench in the on-board tool kit to loosen the wheel fixing bolts counterclockwise.

5、 并用套筒扳手拧动千斤顶的中央螺钉，直至所需更换车轮恰好离开地面。

5. And turn the center screw of the jack with a socket wrench until the wheel to be replaced is just off the ground.

6、 拆下车轮的固定螺栓，并小心的搬下车轮。

6. Remove the wheel fixing bolts and carefully remove the wheel.

7、 换上备用轮胎，并按顺时针方向固定车轮螺栓。

7. Replace the spare tire and tighten the wheel bolts in a clockwise direction.

8、 放下车身并移开千斤顶。

8. Lower the vehicle body and remove the jack.

9、 按对角顺序将车轮固定螺栓完全旋紧。

9. Tighten the wheel fixing bolts completely in diagonal order.

10、 装上车轮饰件。

10. Install the wheel trim.

11、 收起换下的车轮、千斤顶、套筒扳及随车工具包。

11, Stow the removed wheels, jack, socket wrench, and vehicle tool kit.

环保说明

Environmental Protection Instructions

请遵照相关环境保护法处理废旧轮胎。

Please dispose the waste tires according to the relevant environmental protection law.

7、 牵引车辆

7. Vehicle towing

车辆牵引作业时，应遵守牵引车辆的相关规定，被牵引车辆不得超宽、超重、载人。

During vehicle towing, the relevant regulations for towing shall be observed. The towed vehicle shall not be over-wide, overweight or carry people.

7.1 牵引环

7.1 Towing ring

7.1.1 前牵引环

7.1.1 Front towing ring

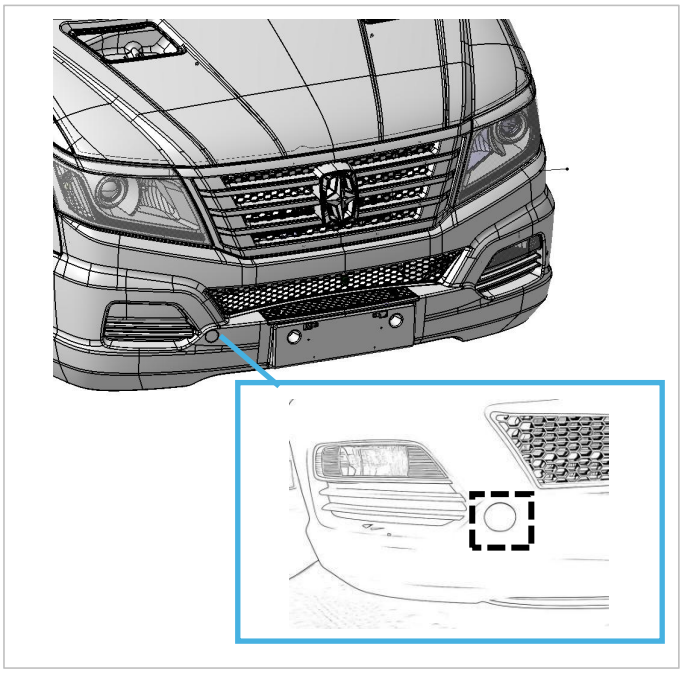

需要从前方牵引本车辆时，先将牵引环拧至前保险杠右侧位置。牵引环放置在副驾驶员前方的随车工具包内。

To tow the vehicle from the front, screw the towing ring to the right side of the front bumper first. The towing ring is placed in the on-board tool kit in front of the front passenger.

7.1.2 后牵引环

7.1.2 Rear towing ring

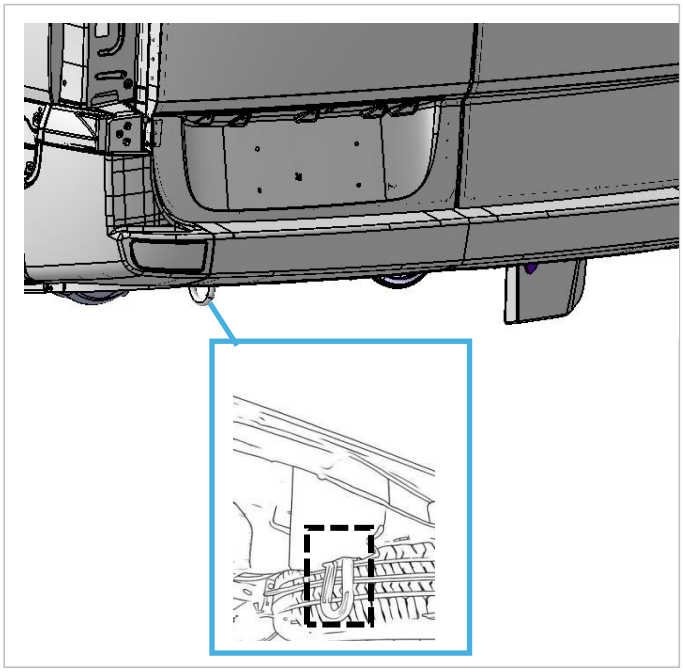

在车辆后部设有后牵引环，可用于从后方拖曳

There is a rear towing ring at the rear of the vehicle, which can be used to tow

其他车辆。

other vehicles from behind.

7.2 牵引

7.2 Towing

被牵引前

Before being towed

⚠ *为确保转向装置可自由转动，务必将点火开关转至“ON（开启）”位置，且在牵引过程中保持。这是为了确保转向解除锁定、转向指示器及制动灯可以工作。*

⚠ *To ensure that the steering device can turn freely, be sure to turn the ignition switch to the "ON" position and keep it in this position during towing. This is to ensure that the steering unlocking, steering indicator and brake light can work.*

被牵引时

When towed

⚠ *被牵引时，请松开车辆驻车制动，且挂上空挡。电动机未运转时，没有制动助力器辅助及动力转向辅助。此情况下，需要更大的力来操作制动踏板及更长的时间及力来转动转向盘。*

⚠ *When the vehicle is towed, please release the parking brake and engage neutral gear. When the motor is not running, there is no brake booster assist or power steering assist. In this case, greater force is required to press the brake pedal and longer time and force are needed to rotate the steering wheel.*

注意：

Caution:

在换入倒挡或从倒挡换出前，车辆必须完全停止。

The vehicle must be completely stopped before shifting into or out of reverse gear.

8、 更换保险丝

8. Replace the fuse

⚠ ***只能使用同等规格/额定电流的保险丝更换。安装非指定的保险丝会损坏电气系统甚至引发火灾。***

⚠ ***Only fuses of the same specification/rated current can be used for replacement. Unspecified fuses will damage the electrical system and even cause a fire.***

试图更换保险丝前，必须关闭点火开关盒所有电器设备。

Turn off the ignition switch and all electrical equipment before replacing a fuse.

任何对汽车电气系统未授权的更换，可能会对电子管理系统产生严重的影响并引发火灾。

Any unauthorized replacement of the vehicle electrical system may have a serious impact on the electronic management system and cause fire.

使用保险丝盒中提供的拉出工具将保险丝外拉以拆下保险丝。

Remove the fuse by pulling it outward using a pull-out tool provided in the fuse box.

保险丝是否熔断可以根据保险丝内部的导线来确认。

Whether the fuse is blown can be confirmed according to the wires inside the fuse.

提醒：同一保险丝重复出现故障表示电路有故障，应尽快联系授权的服务商检修。

Note: Repeated faults of the same fuse indicate that the circuit is faulty. Please contact an authorized service provider for maintenance as soon as possible.

注意：

Caution:

未授权更改电气系统将使保修失效。

Unauthorized changes to the electrical system will void your warranty.

9、 更换灯泡

9. Replace the bulb

在更换任何灯泡前，关闭点火开关和灯开关，以免造成任何可能的短路。

Turn off the ignition switch and light switch before replacing any bulb to avoid any possible short circuit.

在拆卸或安装灯泡时，不要用手接触灯泡，如若接触，使用一块布或酒精擦净灯泡上的手迹。

When removing or installing the bulb, do not touch the bulb with your hands. If you do, use a piece of cloth or alcohol to wipe off any fingerprints or marks from the bulb.

注意：

Caution:

更换的灯泡类型和规格必须与原来的灯泡相同。

The type and specification of the replaced bulb must be the same as those of the original one.

9.1 拆卸与安装灯泡

9.1 Removal and installation of bulb

以下是拆卸灯泡的程序 (安装与之相反，不再描述)，对于没有列出的需要更换的其他灯泡，应尽快联系本公司授权的服务商检修。

The following is the procedure for removal of bulbs (the installation procedure is opposite and will not be

described here). For other bulbs that are not listed but need to be replaced, please contact a service provider authorized by our company for maintenance as soon as possible.

9.1.1 前照灯
9.1.1 Headlight

1、 打开机舱盖：

1. Open the engine hood:

2、 在前照灯后部：

2. Behind the headlight:

—逆时针转动灯泡盖，将其拆下；

- Turn the bulb cover counterclockwise to remove it;

—小心断开 3 针脚连接器；

- Carefully disconnect the 3-pin connector;

—释放弹簧夹并将其向外转动；

- Release the spring clip and turn it outward;

—拆下灯泡。

- Remove the bulb.

9.1.2 前转向灯
9.1.2 Front turn signal light

1、 打开机舱盖：

1. Open the engine hood:

2、 在前照灯后部：

2. Behind the headlight:

—逆时针转动转向灯灯泡固定座，将其拉出；

- Turn the turn signal bulb socket counterclockwise and pull it out;

—拆下灯泡。

- Remove the bulb.

9.1.3 后组合灯
9.1.3 Rear combination light

1、 拆下内饰板以进入组合灯的后部；

1. Remove the interior panel to access the rear of the combination light;

2、 从汽车内部确定故障灯的位置；

2. Determine the position of the malfunction indicator light (MIL) from inside the vehicle;

3、 逆时针转动需要更换的灯泡固定座，将其拉出；

3. Turn the bulb holder to be replaced counterclockwise and pull it out;

4、 拆下灯泡。

4. Remove the bulb.

9.1.4 前顶棚阅读灯
9.1.4 Front roof reading light

1、 使用螺丝起或类似物小心撬开镜片；

1. Use a screwdriver or similar object to carefully pry open the lens;

2、 拆下故障灯泡。

2. Remove the faulty bulb.

9.1.5 踏步灯
9.1.5 Step light

使用螺丝起或类似物小心撬出踏步灯并拆下故障灯泡。

Use a screwdriver or similar object to carefully pry out the step light and remove the faulty bulb.

六、 技术数据

VI. Technical Data

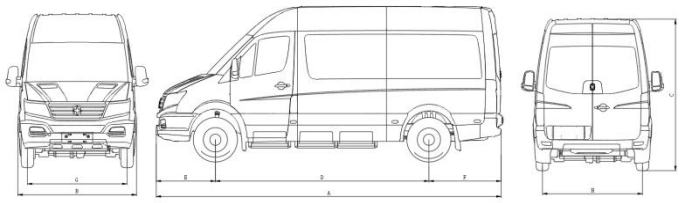

1、 技术参数
1. Technical parameters

整车主要参数

Main parameters of vehicle

参数名称 Parameter name	YBL6590EV
长A mm Length A mm	5915
宽B mm Width B mm	2040
高C mm Height C mm	2632
轴距D mm Wheelbase D mm	3665
前悬E/后悬F mm Front suspension E/rear suspension F mm	1014/1236
前轮距G mm Front wheelbase G mm	1710
后轮距H mm Rear wheel track H mm	1715
最小转弯直径 m Minimum turning diameter m	13.2
最大总质量 kg Maximum gross mass (kg)	4550
整备质量 kg Curb weight (kg)	3050
前轴载荷\后轴载荷 kg Front/rear axle load (kg)	1870/2680
座位数 Number of seats	1

驱动电机规格参数

Specification and parameters of drive motor

参数名称 Parameter name	参数值 Parameter value
驱动电机类型 Type of drive motor	永磁同步电机 Permanent magnet synchronous motor
驱动电机布置型式/位置 Layout/position of drive motor	横置/中置 Horizontal/central
驱动电机冷却方式 Drive motor cooling mode	液冷 Liquid cooling
电动汽车驱动电机功率 Power of drive motor of electric vehicle	额定功率70kW/峰值功率140kW Rated power 70 kW; peak power 140 kW
电动汽车驱动电机扭矩 Torque of drive motor of electric vehicle	额定扭矩170N.m/峰值扭矩410N.m Rated torque 170 N·m; peak torque 410 N·m

主要液体参数

Main liquid parameters

名称 Name	牌号 Grade	容量 Capacity
电机冷却液/升 Motor coolant (L)	HEC-Ⅱ重负荷 HEC-II heavy load	13
制动液/升 Brake fluid (L)	DOT 4	2.4
动力转向液/升 Power steering fluid (L)	ATF Ⅲ	3
洗涤剂/升 Detergent (L)	通用低凝固点洗涤剂 Universal low freezing point detergent	2
空调制冷剂/千克 A/C refrigerant/kg	R134a	0.6

轮胎规格及充气压力（含备胎）

Tire specification and inflation pressure

(including spare tire)

序号 S/N	车型 Type	轮胎规格 Tire specification	轮胎层级 Tire ply rating	前轮充气压力 Front wheel inflation pressure		后轮充气压力 Rear wheel inflation pressure	
1	YBL 6590 EV	225/75R 16LT	12	600kPa	6bar	600 kPa	6bar

车轮定位参数
Wheel Alignment Parameters

序号 S/N	车型 Type	车轮外倾角 Wheel camber	前束角 Toe-in
1	YBL6590EV	$0°50'\ {}_{0}^{+0°20'}$	$0°08'\ {}_{0}^{+0°05'}$

车轮螺栓扭矩 Torque of wheel bolt	210N·m

行驶制动参数
Service brake parameters

项目 Item	参数值 Parameter value
前悬架结构 Front suspension structure	横置板簧麦弗逊独立悬架 MacPherson independent suspension with transversely mounted leaf spring
后悬架结构 Rear suspension structure	变截面少片簧非独立悬架 Non-independent suspension with variable-section few-leaf spring
钢板弹簧形式 Type of leaf spring	变截面少片钢板弹簧 Variable cross-section leaf spring with few leaves
复合材料板簧规格 Specifications of composite leaf spring	323 N/mm
钢板弹簧规格 Specifications of leaf spring	140 N/mm
车轮动平衡要求 Requirements for dynamic balance of wheels	车轮总成两侧剩余动不平衡应小于 15g The residual dynamic imbalance on both sides of the wheel assembly should be less than 15g
制动踏板中心距下方地板垫高度合理范围 Reasonable range of height from brake pedal center to lower floor mat	140mm-145mm
制动踏板自由行程的合理范围 Acceptable range of brake pedal free play.	1.5mm-2.5mm
制动踏板自由行程的合理范围 Acceptable range of brake pedal free play.	摩擦材料的磨损极限至少剩余 2mm The friction material must have at least 2 mm of thickness remaining at the wear limit.

2、 车辆识别

2. Vehicle identification

当您与本公司授权服务商联络时，应提供车辆识别代号（VIN 代号）。如果沟通涉及到驱动电机，也可能需要提供驱动电机编号。

Please provide your vehicle identification number (VIN) when you contact our authorized service provider. If the communication involves the drive motor, you may also need to provide the drive motor number.

车辆识别代号（VIN)

Vehicle identification number (VIN)

车辆上有两处标有车辆识别代号（VIN）

There are two places marked with vehicle identification number (VIN)

1、 右前门门框侧立面车辆铭牌上

1. On the vehicle nameplate on the side of the right front door frame

2、 右前纵梁上

2. On the front right longitudinal beam

车辆铭牌

Vehicle nameplate

手拉门在右前门门框侧立面，外摆门在右前方踏步侧立面

The hand-pull door is on the side elevation of the right front door frame, and the swing door is on the side elevation of the right front step.